SPRINT ELECTRIC

400XLV / 800XLV / 1200XLV DC Servo Motor Controller Product Manual

1 Functional Description

The XLV range of DC servo motor controllers are designed for use with permanent magnet brushed DC servo motors rated from 4 to 12 amps.

The controllers can be used in either current (torque) or speed control modes. For highly dynamic applications, a shaft-mounted DC tacho-generator is recommended for speed feedback but in less demanding applications, armature voltage feedback (Avf) can be used.

The reference signal for both current and speed control can be either bipolar (10V) or unipolar (0 – 10V). Motor speed can be controlled in both forward and reverse directions. An adjustable current limit and fast-acting current control loop protect the controller and motor from sustained overloads.

2 Ratings

Motor current	4 amps (400XLV) 8 amps (800XLV) 12 amps (1200XLV)
Overload	200% for one second (inverse time reduction to 100% in 5 seconds)
Supply voltage variants	12V, 24V, 48VDC (Tolerance = ±10%)
Operating temperature	0 to 40ºC

3 Installation

3.1 Wiring and Protection

Use wire suitable for 1.5x rated armature current

The controller must be protected with suitably rated fuses

3.2 DC Power Supply

The XLV controller requires a DC power supply appropriate to its voltage rating (12V, 24V or 48VDC). It must have a current rating at least equal to the full load current of the motor.

3.3 Mechanical Design

The XLV controller is designed to clip onto a DIN rail.

Do not expose the unit to excessive vibration and ensure that there is sufficient cooling to keep the ambient temperature below 40ºC.

The maximum dissipation of the controller is 15 watts (1200XLV).

3.4 Load

The XLV controller is designed to control the armature current and shaft speed of a permanent magnet DC servo motor. Although the motor current rating can exceed the current rating of the XLV controller, operation under these conditions will mean that rated torque cannot be achieved. Similarly, the armature voltage rating can exceed the XLV controller voltage but the motor will not be able to run at rated speed.

It is also possible to use the XLV controller to control the current in other inductive loads (e.g linear actuators). This typically means the controller must be operated in current control mode (see section 9.3).

3.5 EMC

According to IEC 1800-3 (EN61800-3) the XLV controller is classified as a Basic Drive Module (BDM) only for installation by professional assemblers and for use in the second environment. The drive manufacturer is responsible for the provision of installation guidelines and the manufacturer of the system is responsible for its EMC performance.

Power Port

If the system using the XLV controller will operate in the second environment then a separate filter unit is not normally required.

To meet emissions limits on this port in the first environment, a separate filter is required.

Earthing and Screening

A separate earth connection should be taken from the motor frame to the main earth terminal on the controller (terminal 5). It should not be grounded to any other earth point.

The drive protective earth on terminal 5 should be taken to the star-point earth in the cabinet.

The DC power and armature power connections should be segregated from all other cables in the cabinet.

Where screened or armoured cables are used for power connections the screen should be terminated to earth at both ends of the cable. Control cables of this type should only be connected at the drive end.

WARNING: Safety earthing always takes precedence over EMC earthing.

4 Terminal Descriptions

4.1 Power Terminals

Terminal No	Name	Description
1	DC+	DC supply to controller
2	A+	Positive connection to motor armature
3	A-	Negative connection to motor armature
4	DC-	Common for DC supply to controller
5	GND	Earth

4.2 Control Terminals

Terminal No	Name	Description
1	+10VREF	10V reference (±0.1%) for terminal 3 (10mA current limit)
2	MIN SPD	Connection for speed demand pot to set minimum speed (input impedance = 5k)
3	REF IN	Reference for speed/current (input impedance = 47k)
4	0V	Common for reference input
5	+24V	Output for driving digital inputs (50mA current limit)
6	IMODE	Select current (torque) mode – active high (input impedance = 110k)
7	FWD	Forward direction select for unipolar reference – active high (input impedance = 110k)
8	REV	Reverse direction select for unipolar reference – active high (input impedance = 110k)
9	RUN	Electronic enable for controller – active high (input impedance = 110k)
10	0V	Common for tacho
11	TACH	DC tacho-generator input (±60VDC max) (input impedance = 150k)

The control terminals are all referenced to negative DC supply to the controller (DC-). All interface signals must be referenced to the same potential.

Further details on the function of the control terminals are given in section 9 of this manual.

5 Pre-sets and Diagnostics

The following pre-sets (potentiometers) are available for user adjustment under the translucent red flap on the front of the product.

Pre-set	Description
Max Spd	Sets maximum motor speed (in conjunction with speed scaling selection switch)
Min Spd	Sets minimum motor speed (0 to 30% of Max Spd setting)
Spd P	Speed loop proportional gain
Spd I	Speed loop integral time constant
ILim	Current limit
Cur P	Current loop proportional gain
Cur I	Current loop integral time constant
IRcomp	Compensation for IR drop in motor when running with Avf (0 to 25% of max armature voltage)

All pots are factory-set to a 'safe' condition (fully CCW). This means the gains are at minimum setting and the current limit is zero.

A switch is provided in the same location as the pre-set pots. This has two functions:

Function 1: Select Speed Feedback Source

S1 'ON' Avf speed control
S1 'OFF' Tacho speed control

Function 2: Select Speed Feedback Scaling

S2 'ON' VA range = 10 – 25VDC; Tacho range = 12 – 30VDC
S2 'OFF' VA range = 20 – 50VDC; Tacho range = 24 – 60VDC

Two LEDs are provided for diagnostic purposes:

Power LED – indicates that DC power is applied to the unit and the internal power supply is operational
Alarm LED – indicates the presence of an internal fault or trip

Further details on the possible causes of internal trips is given in the 'Alarms' section of this manual.

6 Block Diagram

The following diagram shows the key function blocks within the controller. Note the nested control loops – an inner current loop and an outer speed loop.

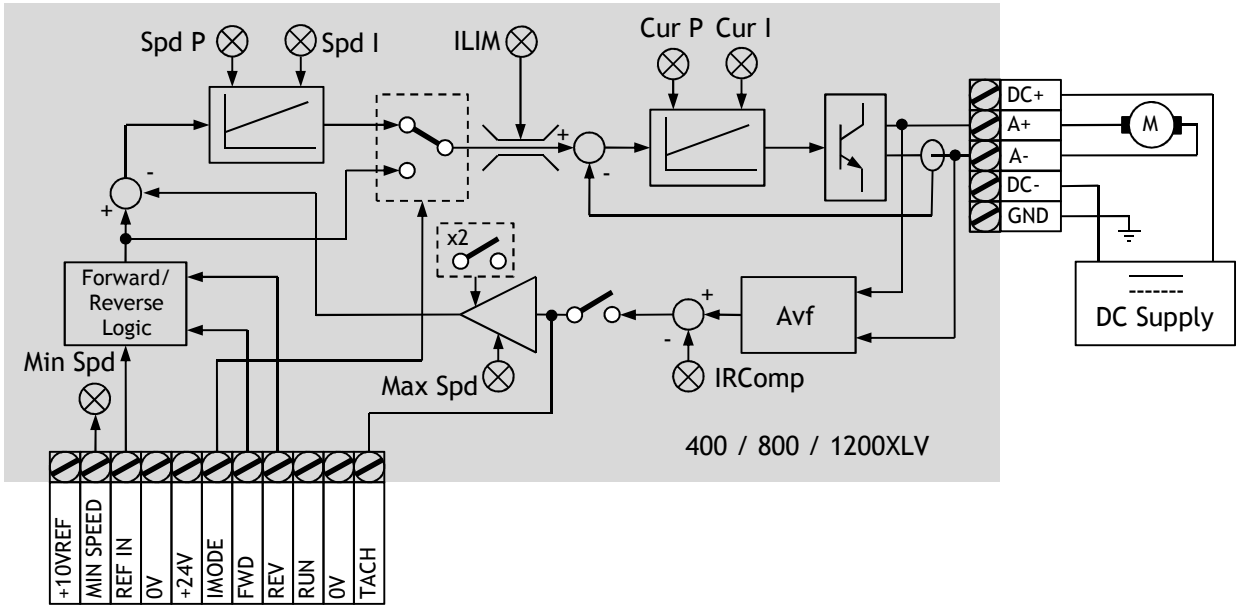

The RUN switch must be connected to +24V for the controller to operate. This is a NON-LATCHING input.

7 Commissioning Procedure

Ideally the controller should be commissioned with the motor decoupled from the load. If this is not possible then exercise additional caution in the commissioning process to ensure the load is not damaged as a result of the motor rotating in the wrong direction, excessive speed or high vibration from a poorly tuned speed loop.

7.1 Pre-operation Checks

Before applying power to the controller, the following must be checked:

- The DC supply voltage is correct
- Motor rating (armature current and voltage) is within the rating of the controller
- All power and control connections are securely made
- All pre-sets are in their default position (fully counter-clockwise)

Power may then be applied:

- Check that the 'power' LED illuminates.
- Confirm that no RUN signal is present (terminal T9 open-circuit)
- Check that armature voltage feedback (Avf) is selected as the speed feedback source (Avf/Tach switch OFF), even if a tachogenerator will ultimately be used for this purpose.
- Select x1 scaling for maximum speed. This will limit the armature voltage to 25V.

7.2 Start-up Procedure

The next stage in the commissioning process is to run the motor with armature voltage feedback.

- Apply a positive speed reference of around 10% (1V) to terminal T3
- Rotate the current limit pre-set to approximately half-way
- Connect the RUN terminal (T9) to +24V
- Check that the motor is running smoothly in the direction required for a positive speed reference

7.3 Tacho Commissioning

Operating with tacho speed feedback will give superior dynamic performance and is recommended for all high bandwidth applications.

To commission a motor with tacho feedback, follow the procedure below:

- Connect one of the tacho wires to terminal T10
- Run the motor using the procedure detailed in 7.2 above
- With the motor running measure the voltage on the other tacho wire
- If this voltage has the opposite polarity to the voltage on terminal T3, stop the motor, disconnect the power to the controller and connect the wire into terminal T11
- If the voltage is the same polarity then disconnect the power to the controller and reverse the two tacho wires
- Turn the Avf/Tach switch ON
- Power the controller on
- Re-start the motor
- Check that the motor is running smoothly in the direction required for a positive speed reference

Note that a rectified AC tacho cannot be used with the XLV controller.

7.4 Tuning and Optimisation

7.4.1 Maximum Speed Setting

Whether running with tacho or Avf, this pre-set is used to set the maximum speed of the motor using the procedure below:

- Set the speed reference to maximum (+10V) on terminal T3
- If running with Avf, measure the voltage on terminals A+, A- and increase the Max Spd pot until the measured armature voltage is equal to that stated on the motor nameplate (note that if the motor's rated armature voltage exceeds 25V the Spd x2 switch should be set to the OFF position)
- If running with tacho feedback, increase the Max Spd pot until the voltage measured across terminals T10 and T11 equals the full speed tacho voltage (note that if the maximum tacho voltage exceeds 30V then the Spd x2 switch should be set to the OFF position)

Avoid changing the position of the Spd x2 switch whilst the motor is running as this will result in a step speed change.

7.4.2 Minimum Speed Setting

With a 10k pot connected between terminal T1 and T2 and its wiper connected to terminal T3 the minimum speed can be adjusted with the Min Spd pre-set. This connection is shown in the 'Block Diagram' section of this manual.

Increasing Min Spd pot (rotate CW) the minimum speed can be adjusted up to a maximum of 30% of maximum speed.

7.4.3 Current Limit Adjustment

The current limit pre-set Ilim is used to adjust the maximum motor current of the controller. With the pot fully CCW the current limit is 0% and the motor will not run. With the pot at mid-position the full current of the controller is available continuously (4 amps for 400XLV). With the pot fully CW the controller will deliver 200% of its rating for one second (8 amps for a 400XLV).

When the overload capability of the controller is used, the current limit automatically reduces to 100% to protect the controller and the motor.

With Ilim pre-set fully CW the controller will deliver 200% current for one second and will then reduce its output to 100% within 5 seconds.

7.4.4 IR Compensation

One of the limitations of armature voltage feedback as a method for controlling motor speed is that when under load, Avf is no longer directly proportional to motor speed.

To compensate for the effect of load, the IRcomp pre-set should be adjusted using the following procedure:

- Run the motor at full speed and monitor the armature voltage
- When the motor is fully loaded, increase the IRcomp pre-set (rotate CW) until the armature voltage matches the nameplate value

Note that setting the IRcomp pre-set excessively high can result in speed instability.

7.4.5 Control Loop Tuning

The XLV controller has two nested control loops: an inner current loop and an outer speed loop. Both use PI (proportional-integral) compensators which each have independent control of the P and I terms.

The controller will function well with the P and I pre-sets in the default position (i.e all CCW) but performance may be optimised by adjusting them.

Guidance for tuning the control loops is given below:

- First optimise the current control loop
- Apply small step load changes and increase the proportional gain (P Cur) to improve the speed of response, taking care not to make the current loop unstable
- Reduce the integral time constant (I Cur) to reduce over-shoot and settling time
- Now optimise the speed loop by applying small step changes to the speed reference and adjusting P Spd and I Spd using the same criteria as for the current loop tuning

Speed and current can be monitored by an oscilloscope on test pins TP2 and TP3 respectively. The 0V reference for these signals is located at TP1.

8 Trips and Alarms

During commissioning and normal operation controller trips may happen. This will result in the controller stopping and will cause the Alarm LED to illuminate.

The various trips that can result in an alarm state are summarised below:

Trip	Description
OVERI	Armature over-current
OVERV	DC over-voltage
OVERT	Heatsink over-temperature
FFAIL	Cooling fan failure

Note that there is no motor over-temperature trip. To protect the motor from over-heating a thermal protection device attached to the motor must be inter-locked with the DC supply to the controller.

When a trip occurs, the RUN signal on terminal T9 must be cycled (i.e from ON to OFF and then back to ON again) before the controller will re-start. Note that if the trip condition persists it will not be possible to re-start the controller.

8.1 OVERI

The controller will trip on this alarm if the instantaneous current exceeds 250% of the current rating of the particular model. As an example, a 4 amp 400XLV will have a trip current of 10 amps.

An OVERI trip is characterised by the controller stopping immediately when there has been a large speed or load change. It will however, re-start immediately. Typically a trip will occur when too much proportional gain has been applied to the current loop. Try reducing the gain (turn P Cur ACW) to prevent the trip re-occurring.

Less frequently a motor fault can cause on OVERI trip. This can be confirmed by disconnecting the motor and re-starting the controller. If it no longer trips then check the motor and wiring integrity.

If the controller still trips with no motor connected, the fault is internal to the controller and it should be removed from the system and returned to Sprint Electric Ltd.

8.2 OVERV

When the DC supply to the controller exceeds 60V, an over-voltage trip will occur.

This typically happens when the load is decelerated rapidly and the rotational energy cannot be absorbed by the losses in the motor and controller or the DC supply feeding the unit. This excess energy increases the voltage on the capacitors in the controller and would eventually lead to catastrophic failure if no trip occurred.

Normally the solution to this problem is to reduce the rate of change of speed reference but, if this is not possible, the only other possibility is to add more capacitance to the DC supply to absorb the energy.

Note that this trip **WILL NOT** protect the controller if a voltage is applied to the unit that exceeds its maximum rating.

8.3 OVERT

If the temperature of the XLV heatsink exceeds 70ºC, an over-temperature trip will occur.

This will generally only happen if there is inadequate airflow in and around the controller. The time it takes for the controller to trip will depend on the level of load.

If an OVERT trip occurs then first establish why there is insufficient cooling and then make any necessary modifications to the installation before re-starting the controller.

8.4 FFAIL

Should the cooling fan in the controller stall then this is detected and an alarm is raised.

If it is suspected that a fan failure has occurred, check to see if air is being blown out of the controller and, if this isn't the case, inspect the outside of the unit for foreign objects that may have jammed the blades of the fan. If there is nothing obvious then return the controller to Sprint Electric Ltd.

9 Applications

The following diagrams show the basic wiring requirements for the XLV controller in different applications. Note that protection circuitry (fusing, motor over-speed, motor over-temperature) are omitted as they will depend on the particular risks identified in the end application.

9.1 Bi-directional Speed Control with Bipolar Reference

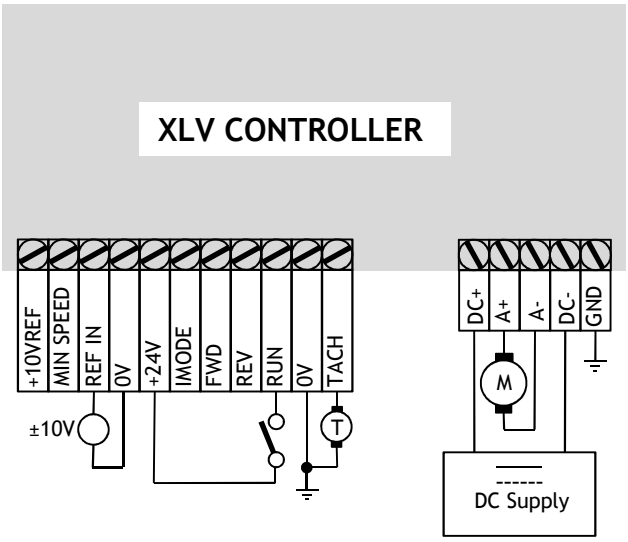

This configuration would typically be used when an external controller (e.g a positioning system) provides the speed reference.

9.2 Bi-directional Speed Control with Unipolar Reference

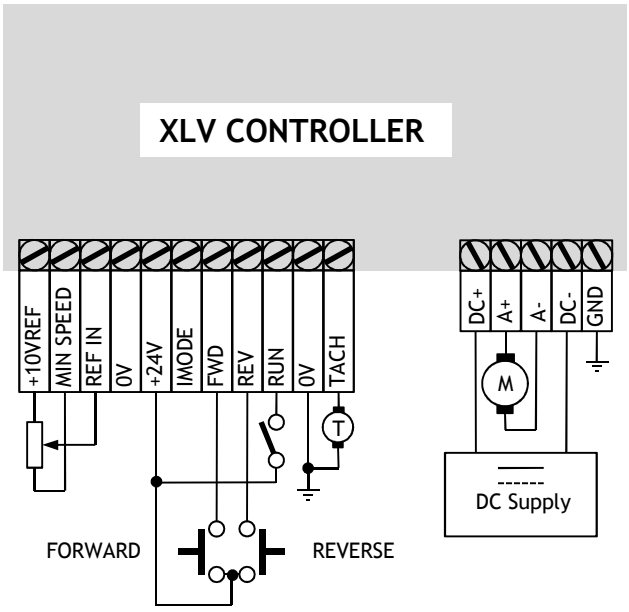

Note that the switches for forward and reverse running do not need to be latching as this function is within the controller.

9.3 Unipolar Current Control

This configuration can be used for non-motor loads requiring current control (e.g linear actuators).

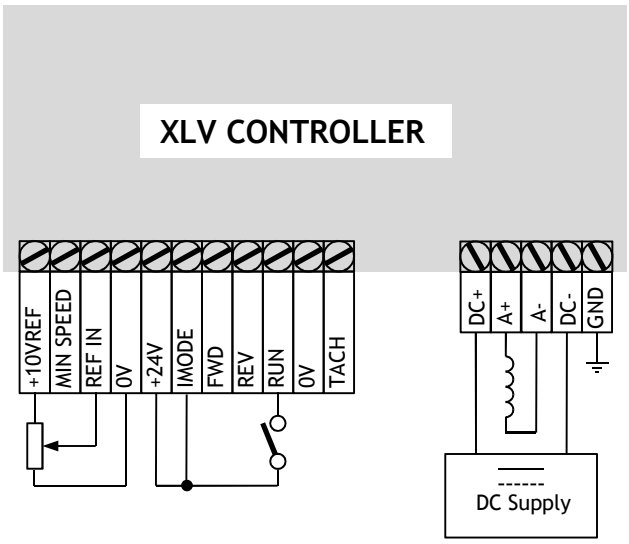

If operating a motor in this configuration, include measures to limit motor speed under light-load conditions.

10 Mechanical Details

10.1 User Connections

The user controls of the XLV motor controller are shown below:

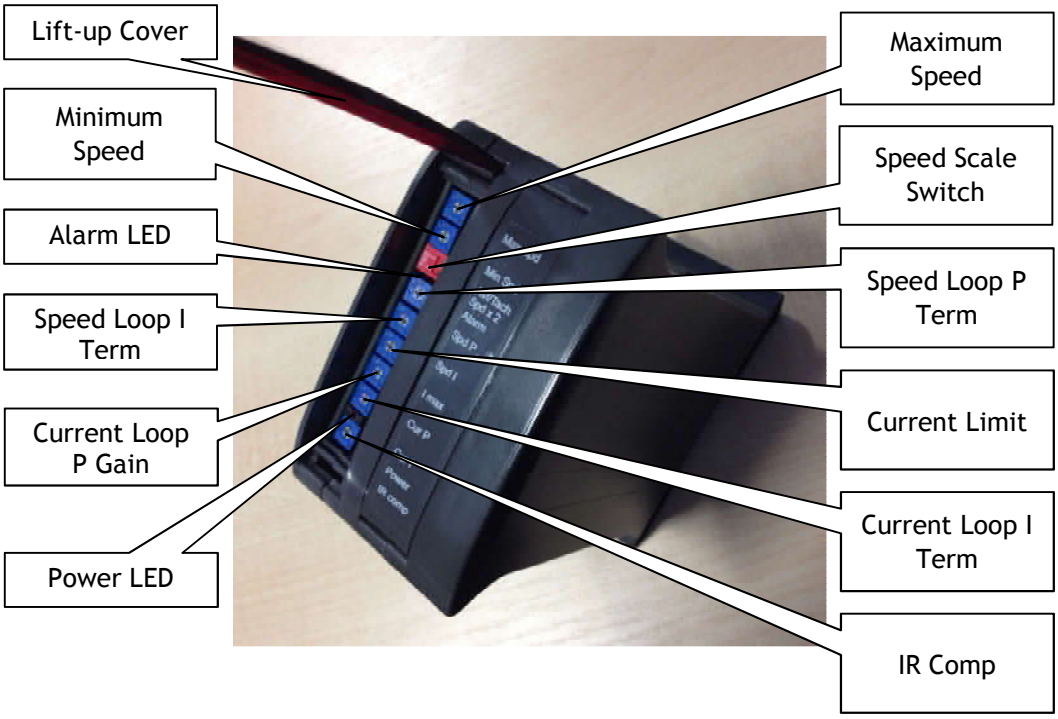

The power and control connections are underneath the unit:

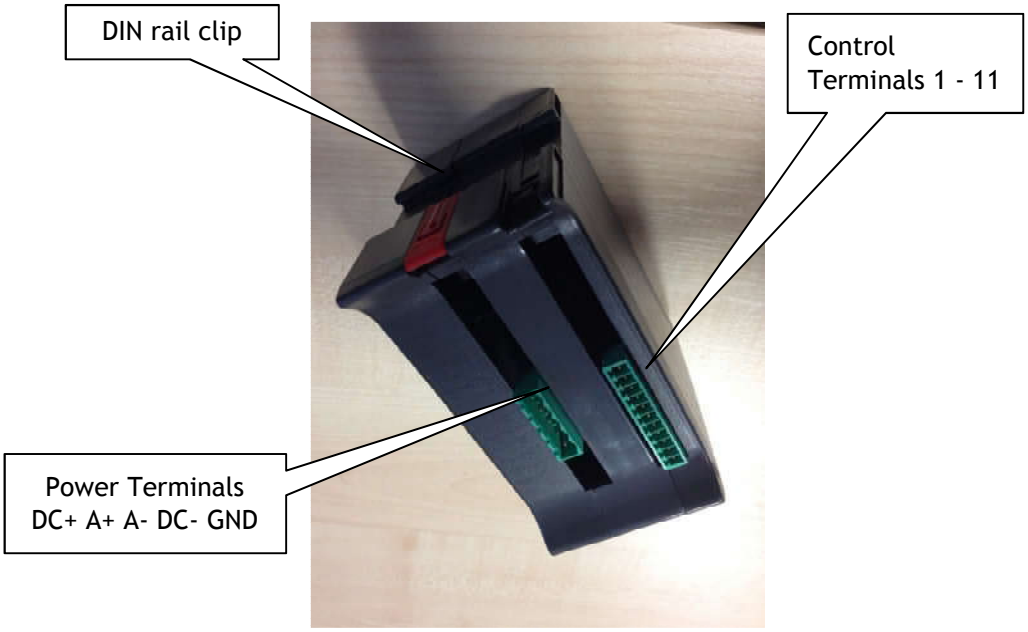

10.2 Dimensions

	Height (mm)	Width (mm)	Depth (mm)
400XLV	105	60	120
800XLV	105	60	120
1200XLV	105	70	120

11 Safety Information

The XLV servo motor controller operates from a supply voltage of less than 60V which means there is a very low risk of electric shock if the user comes into contact with any of the power terminals during operation. However, the controller is capable of producing high current which can cause the load motor and associated machinery to run at high speeds or generate significant heat, or both, if incorrectly configured.

Sprint Electric Ltd does not accept any liability whatsoever for the installation, fitness for purpose or application of its products. It is the user's responsibility to ensure the unit is correctly used and installed.

Health and Safety at Work: Electrical devices constitute a safety hazard. It is the responsibility of the user to ensure compliance with any acts or byelaws in force. Only skilled persons should install this equipment.

Sprint Electric Ltd
Arundel, UK
Tel: +44 (0)1243 558080
Fax: +44 (0)1243 558099
Email: info@sprint-electric.com
Web: www.sprint-electric.com