Trapped Key ISOLATOR SWITCH – Types ISB1, ISB2, ISP
Operating Instructions



ISB1
(25A & 40A)



ISB2
(63A)

ISP (Panel Mount)
(25A, 40A & 63A)



READ AND UNDERSTAND THESE INSTRUCTIONS BEFORE INSTALLING, OPERATING, OR MAINTAINING THIS EQUIPMENT.
The product is designed to be a component of a customized safety oriented control system. It is the responsibility of the user to ensure the correct overall functionality of its systems and machines. IDEM, its subsidiaries and affiliates, are not in a position to guarantee all of the characteristics of a given system or product not designed by IDEM.

WARNING:
It is the responsibility of the person installing the electrical equipment to ensure that the installation meets the requirements of the IET wiring regulations and is therefore 'fit for purpose'. Factors such as correct selection of components, cable sizing, protective devices and Earth bonding are all critical and should be checked prior to full testing and power-up. Any other regulations applicable to the equipment being installed such as the Machinery Directive and current health and safety legislation must also be adhered to. Terminals, including factory fitted, should be checked periodically to ensure correct tightness.

MAINTENANCE: Every month: Check correct operation of all circuits. If the key or housing display signs of mechanical damage then remove and replace.
IDEM will not accept responsibility for failure of the interlock functions if the installation and maintenance requirements are not implemented.
THESE INSTRUCTIONS FORM PART OF THE PRODUCT WARRANTY.

PRODUCT DIMENSIONS (mm):

ISB1

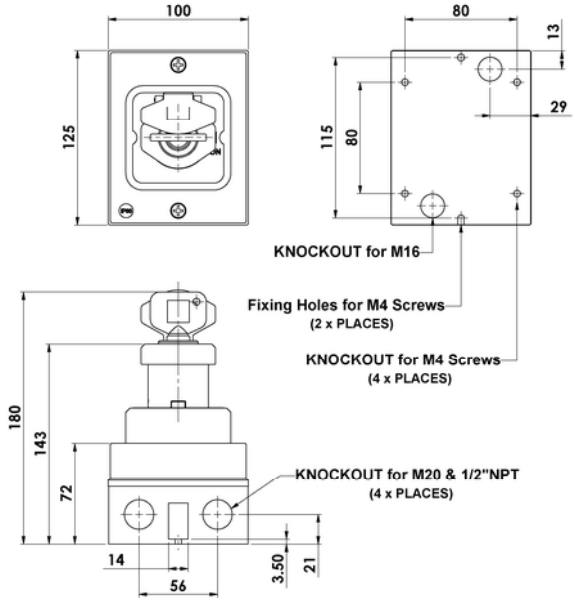

ISB2

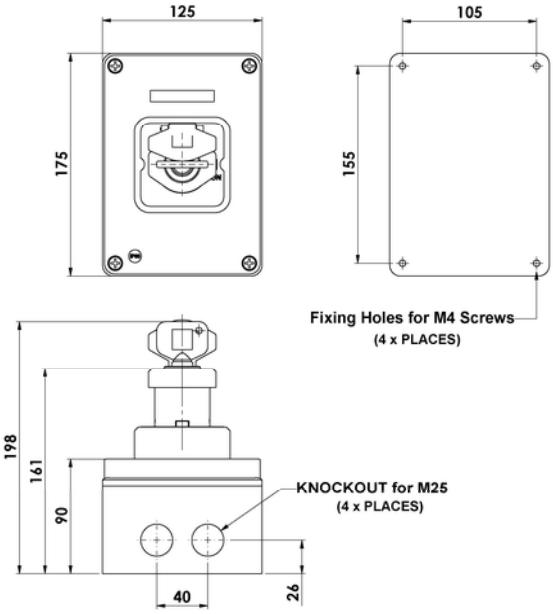

ISP

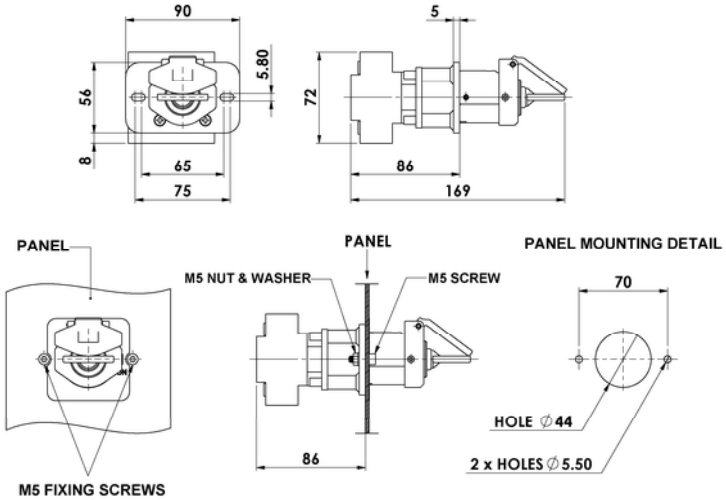

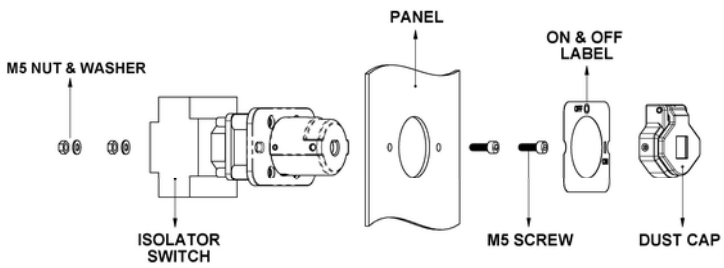

Trapped Key ISOLATOR SWITCH – Types ISB1, ISB2, ISP

TECHNICAL SPECIFICATIONS (ISOLATOR BLOCK):

					ISB1 25A	ISB1 40A	ISB2 63A	ISP 25A	ISP 40A	ISP 63A
IEC & EN		Volts	V		690	690	690	690	690	690
UL		Volts	V		600	600	600	600	600	600
Main switch isolating voltage up to		Volts	V		750	750	750	750	750	750
Rated impulse withstand voltage Uimp		Volts	kV		6	6	6	6	6	6
Rated uninterrupted current Iu		Amps	A		20	32	40	25	40	63
Rated Operational Current Ie										
IEC & EN	AC-22A	Up to 690V	A		20	32	40	25	40	63
	AC-21A	Up to 690V	A		25	40	63	32	63	80
	AC-1	Up to 690V	A		25	40	63	32	63	80
Rated Operational Power AC-23A (50-60Hz)										
IEC & EN	3 Phase	220-240V	kW		7.5	15	22	11	22	30
		380-440V	kW		15	22	45	22	45	45
		500-690V	kW		15	22	45	22	45	45
Rated Operational Power AC-3 (50-60Hz)										
IEC & EN	3 Phase	220-240V	kW		5.5	11	15	8	15	22
		440V	kW		11	15	30	15	30	30
		690V	kW		11	15	30	15	30	30
UL Power Rating										
DOL	3 Phase	120V	hp		1.5	3	5	3	5	7.5
		240V	hp		3	7.5	10	7.5	10	15
		480V	hp		7.5	20	20	15	20	25
		600V	hp		10	25	30	20	30	30
	1 Phase	120V	hp		0.5	2	3	1.5	3	3
		240V	hp		1.5	3	5	2	5	7.5
UL Short Circuit Ratings										
Fuse Rating, Class J		Amps	A		-	45	70	45	70	70
Fuse Rating, Class RK5		Amps	A		20	-	-	-	-	-
Rated Fuse Short Circuit Current		Amps	kA		10	10	10	10	10	10
Short Circuit Capacity (IEC)										
Maximum Fuse Size Type gl		Amps	A		20	32	63	32	63	63
Rated Fuse Short Circuit Current		Amps	kA		5	30	30	30	30	30
Terminal Specification										
Single/Multiple Strand Wire				Min-mm²	2.5	2.5	2.5	2.5	2.5	2.5
				Max-mm²	10	10	25	10	25	25
Fine Strand with Sleeve				Min-mm²	0.75	0.75	2.5	0.75	2.5	2.5
				Max-mm²	6	6	10	6	10	10
American Wire Gauge				AWG	10	10	6	10	6	6
Recommended Tightening Torque				Nm	1.7	1.7	2.0	1.7	2.0	2.0

SCHEMATIC:

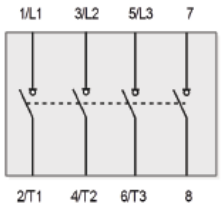

Procedure to dismount the cover (ISB1 & ISB2):

ISOLATE POWER.
ENSURE SWITCH IS IN THE OFF POSITION.
UNSCREW THE COVER SCREWS AND REMOVE COVER.
AFTER WIRING ENSURE COVER IS FITTED TO ORIGINAL POSITION.
DO NOT OVERTIGHTEN THE COVER SCREWS (RECOMMENDED TORQUE 0.5Nm).

TECHNICAL SPECIFICATION :

Mechanical Life (B10d) **200,000cycles.**
Ambient temperature **-20C / 40C.**

IDEM SAFETY SWITCHES Ltd., 2 Ormside Close, Hindley Industrial Estate, Hindley Green, Wigan, WN2 4HR UK. Tel: +44 (0)1942 257070 Fax.: +44 (0)1942 257076
IDEM (USA) 4416 Technology Drive, Fremont, CA 94538 Tel:510-445-0751 Fax:1866-431-7064 email: sales@idemsafety.com Web: www.idemsafety.com

Doc: 102650
Oct.2017