

Image may differ from product. See technical specification for details.

# TSN 517 A

## V-ring seal

V-ring seals consist of a V-ring and a sheet steel sealing washer with a vulcanized rubber lip. The rubber lip fits into the seal groove in the housing. The washer is protected against corrosion. The seals are used to protect bearings from contamination or as secondary seals to protect primary seals in highly contaminated environments. They are a cost-effective and easy to install contaminant barrier for all kind of shafts. They are available in nitrile rubber. When ordering, please note that one item (seal pack) contains two seals.

- Easy to install
- Many variants
- Cost-effective

# Overview

## Dimensions

| | |
|---|---|
| Shaft diameter | 75 mm |
| Housing groove diameter | 106 mm |
| Width | 10.5 mm |

## Properties

| | |
|---|---|
| Accessory type | Housing seal |
| Sealing type | V-ring |
| Material | Nitrile rubber with steel element |

## Logistics

| | |
|---|---|
| Product net weight | 0.095 kg |
| eClass code | 23-05-17-90 |
| UNSPSC code | 31171519 |

# Technical specification

| | |
|---|---|
| Material | Nitrile rubber with steel element |

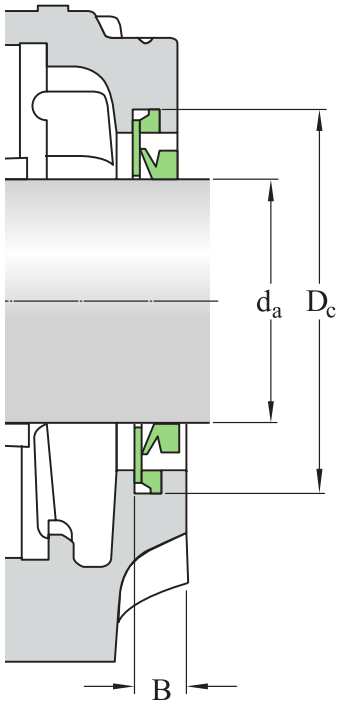


## Dimensions

| | | |
|---|---|---|
| $d_a$ | 75 mm | Shaft diameter |
| $D_c$ | 106 mm | Diameter of seal groove |
| B | 10.5 mm | Width |

# Terms of use