CFVCEA - emergency assist alarm VoCALL kit



This Emergency Assist Alarm VoCALL kit has been specifically designed to integrate disabled call functions into the VoCALL network or VoCALL compact ranges providing the perfect solution for conformity with the Building Regulations Document M and Equality Act 2010.

Emergency Assist Alarms are required by Building Regulation Document M, and by integrating it with the Emergency Voice Communication System all calls relating to disabled communications can be monitored on the same VoCALL system.

This Emergency Assist solution is fully monitored and battery backed by the VoCALL system, saving local power supplies and giving confidence in the system integrity.

The Emergency Assist Alarm shows up as a call on the VoCALL system, but has no speech path so a conversation cannot be had with the occupant, use of the type B outstations would allow this.

Features and benefits

- Monitored to BS5839 Pt9
- Remote powered from the VoCALL system
- Dual loop pull cord
- High contrast labels
- Blue indication
- Saving power, no PSU is required.
- One install saves running 2 separate systems.
- One location for all calls from disabled toilets and refuge points monitored from one location.
- Tactile braille signage to assist partially sighted people to easily operate the cancel plate.
- No additional equipment necessary to connect to the VoCALL system.

Powering Business Worldwide

System Installation

The Emergency Assist Alarm should be installed in accordance with the recommendations of BS8300 and to the requirements of Building Regulations Approved Document M. The diagram below demonstrates a typical layout for installation in a disabled persons toilet.

Note: Where pertinent other or alternative standards of design and installation should be adhered to.

All system components are designed to be sited internally and positioned in locations where they are readily accessible by the user. The area should be clean and dry. Sound and light levels allow the status of all device indicators and sounders to be seen and heard.

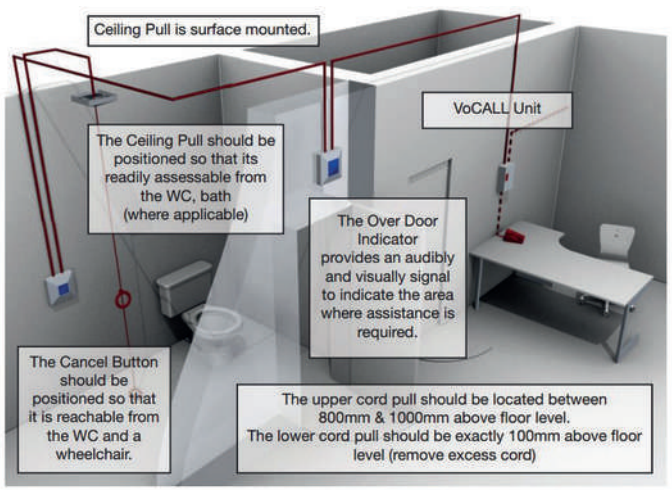

Wiring

The wiring from the VoCALL master exchange, or from the VoCALL compact exchange consists of a single pair; this does not have to be fire rated, although this may be used, the link through to the pull cord is monitored and any open circuit or short will be recorded as a fault on the VoCALL system. A 10K resistor must be fitted in the pull cord unit for the monitoring to work. If this is not fitted then the exchange will show open circuit fault.

Always segregate Extra Low Voltage (ELV) wiring from the mains wiring. System requires minimum 2 core 0.4mm² cable. All wall-mounting devices should be mounted onto a back box of the required depth.

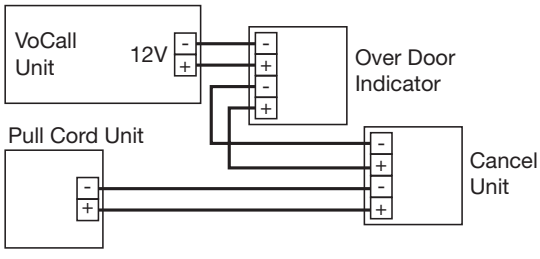

Note:

1. Installer must follow schematic above when connecting to VoCALL circuits.
2. Circuit is limited to one each of the over door indicator, pull cord, and cancel units only.

Pull station installation

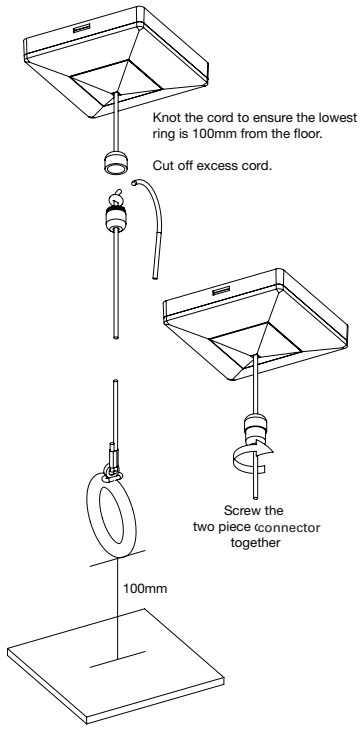

System operation

To place a call - operate the pull cord. LEDs will illuminate on pull cord unit, cancel unit and over door indicator. An internal buzzer will also sound in the over door indicator.

Vocall unit will indicate emergency assist alarm activations.

To reset call - press the cancel button on emergency assist alarm.

Catalogue numbers

Description	Code
Emergency assist alarm - vocall kit	CFVCEA
Emergency assist pull code unit	CFEAPULL
Over door indicator	CFEAODI
Cancel button	CFEARSP
Pull cord accessory pack	CFEACORD
Disabled sticker (pack of 5)	CFEADS