PN3593
PN-025-REG14-MFRKG/US/ /V

Pressure sensors

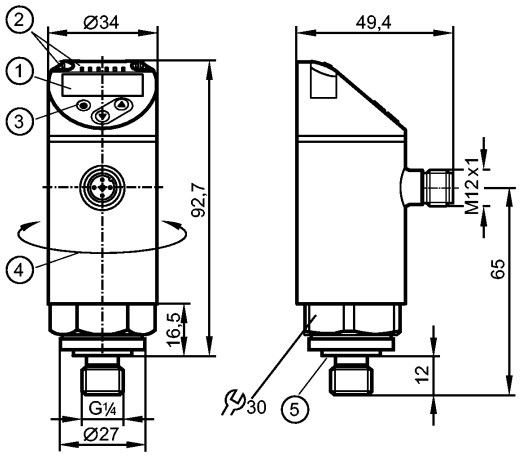

1: 4-digit alphanumeric display / alternating indication of red and green
2: LEDs (display unit / switching status)
3: Programming button
4: Upper part of the housing can be rotated by 345°
5: Process connection sealing FKM / DIN 3869

Product characteristics

Electronic pressure sensor				
M12 connector				
Function programmable				
Measuring element: ceramic-capacitive pressure measuring cell				
Process connection: G ¼ A / M5 I (according to DIN EN ISO 1179-2)				
2 outputs OUT1 = switching output OUT2 = analogue output				
4-digit alphanumeric display / alternating indication of red and green				
Measuring range: 0...25 bar / 0...362 psi / 0...2.5 MPa				
Application				
Application		Type of pressure: relative pressure Group 2 fluids according to the Pressure Equipment Directive (PED), group 1 fluids on request		
Pressure rating		150 bar	2175 psi	15 MPa
Bursting pressure min.		350 bar	5075 psi	35 MPa
Vacuum resistance	[mbar]	-1000		
Medium temperature	[°C]	-25...80		
Electrical data				
Electrical design		DC PNP		
Operating voltage	[V]	18...30 DC [1])		
Current consumption	[mA]	< 35		
Insulation resistance	[MΩ]	> 100 (500 V DC)		
Protection class		III		
Reverse polarity protection		yes		
Outputs				
Output		2 outputs OUT1 = switching output OUT2 = analogue output		
Output function		normally open / closed programmable; 4...20 mA or 0...10 V		
Current rating	[mA]	150; 200 (...60 °C); 250 (...40 °C)		
Voltage drop	[V]	< 2.5		
Short-circuit protection		pulsed		

PN3593 - Electronic pressure sensor - eclass: 27201302 / 27-20-13-02

Overload protection		yes		
Switching frequency	[Hz]	≤ 170		
Analogue output		4...20 mA; 0...10 V		
Max. load	[Ω]	4...20 mA: max. 500		
Min. load resistance	[Ω]	0...10 V: min. 2000		
Measuring / setting range				
Measuring range		0...25 bar	0...362 psi	0...2.5 MPa
Setting range				
Set point, SP		0.2...25 bar	4...362 psi	0.02...2.5 MPa
Reset point, rP		0.1...24.9 bar	2...360 psi	0.01...2.49 MPa
in steps of		0.1 bar	2 psi	0.01 MPa
Accuracy / deviations				
Accuracy / deviations (in % of the span)				
Switch point accuracy		< ± 0.5		
Characteristics deviation *)		< ± 0.25 (BFSL) / < ± 0.5 (LS)		
Hysteresis		< ± 0.25		
Repeatability **)		< ± 0.1		
Long-term stability ***)		< ± 0.05		
Temperature coefficients (TEMPCO) in the temperature range -25...80° C (in % of the span per 10 K)				
Greatest TEMPCO of the zero point		0.2		
Greatest TEMPCO of the span		0.2		
Reaction times				
Power-on delay time	[s]	0.3		
Min. response time switching output	[ms]	< 3		
Delay time programmable dS, dr	[s]	0...50		
Damping for the switching output (dAP)	[s]	0...4		
Damping for the analogue output (dAA)	[s]	0...4		
Response time analogue output	[ms]	< 3		
Integrated watchdog		yes		
Software / programming				
Programming options		hysteresis / window function; NO / NC; on delay, off delay; damping; display unit; current/ voltage output		
Interfaces				
IO-Link device				
Transfer type		COM2		
IO-Link revision		1.1		
SDCI standard		IEC 61131-9		
IO-Link device ID		430 d / 00 01 ae h		
Profiles		Smart Sensor: Process Data Variable; Device Identification, Device Diagnosis		
SIO mode		yes		
Required master port class		A		
Process data analogue		1		
Process data binary		1		
Min. process cycle time	[ms]	2.3		
Environment				
Ambient temperature	[°C]	-25...80		
Storage temperature	[°C]	-40...100		
Protection		IP 65 / IP 67		
Tests / approvals				
Pressure equipment directive		Sound engineering practice		
EMC		DIN EN 61000-6-2 DIN EN 61000-6-3		
Shock resistance		DIN EN 60068-2-27	50 g (11 ms)	
Vibration resistance		DIN EN 60068-2-6	20 g (10...2000 Hz)	

PN3593 - Electronic pressure sensor - eclass: 27201302 / 27-20-13-02

MTTF	[Years]	181
UL approval number		J004
Mechanical data		
Process connection		G ¼ A / M5 I (according to DIN EN ISO 1179-2)
Process connection sealing		FKM (to DIN 3869)
Materials (wetted parts)		stainless steel (316L / 1.4404); Al2O3 (ceramics); FKM
Housing materials		1.4404 (V4A / 316L); PBT+PC-GF 30; PBT-GF 20; PC
Switching cycles min.		100 million
Tightening torque	[Nm]	25...35 (recommended tightening torque²)
Restrictor element integrated		no (can be retrofitted)
Weight	[kg]	0.257
Displays / operating elements		
Display		Display unit 3 x LED green (bar, psi, MPa) Switching status 1 x LED yellow 4-digit alphanumeric display / alternating indication Measured values of red and green
Electrical connection		
Connection		M12 connector; Gold-plated contacts
Wiring		

Core colours

BK black
BN brown
BU blue
WH white



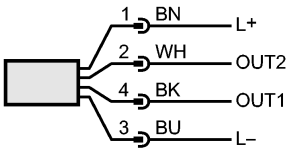

OUT1: switching output or IO-Link
OUT2: 4...20 mA / 0...10 V
Colours to DIN EN 60947-5-2

Remarks		
Remarks		*) BFSL = Best Fit Straight Line / LS = Limit Value Setting **) with temperature fluctuations < 10 K ***) in% of the span / 6 months ¹) to EN50178, SELV, PELV ²) Depends on lubrication, seal and pressure rating
Pack quantity	[piece]	1