EvoSIGNAL / EvoSIGNAL Accessories

Mini Adaptor PG29 EM GY



Part No.: 260.700.04

MECHANICAL DATA	
Height	33 mm
Diameter	62 mm
Materials	PC/ABS
Housing colour	Grey
Protection category	IP66
Cable entry	Through hole
Cable entry maximum	d = 9 mm
Type of fixing	Built-in mounting
Working temperature minimum	-30°C
Working temperature maximum	+60°C
UL Type Rating	Type 12
Weight with packaging	32 g
Product weight	28 g

ELECTRICAL DATA	
Pollution degree	3 In the connection area: 2

! For additional installation and mounting information, refer to the appropriate user guide at www.werma.com. This printed copy is for information only and is subject to alteration.

EvoSIGNAL / EvoSIGNAL Accessories

Mini Adaptor PG29 EM GY

DRAWING

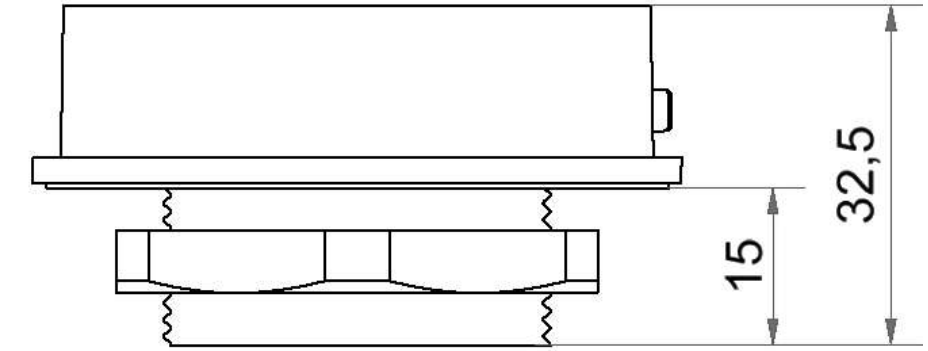

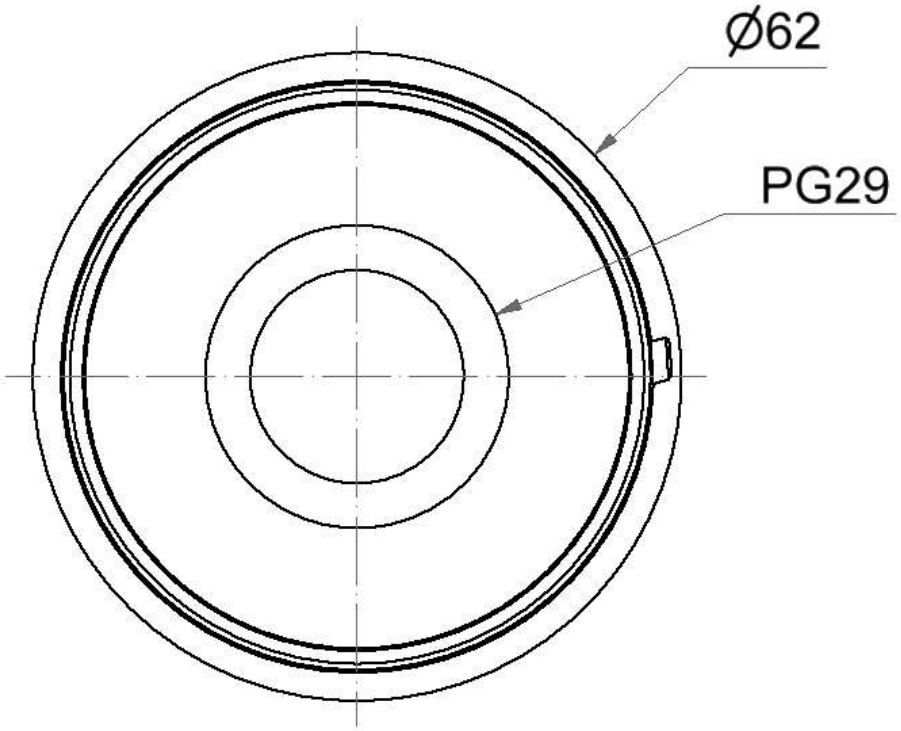

! For additional installation and mounting information, refer to the appropriate user guide at www.werma.com. This printed copy is for information only and is subject to alteration.