E11696

T-splitter

Y-splitter/STM12/2xUS

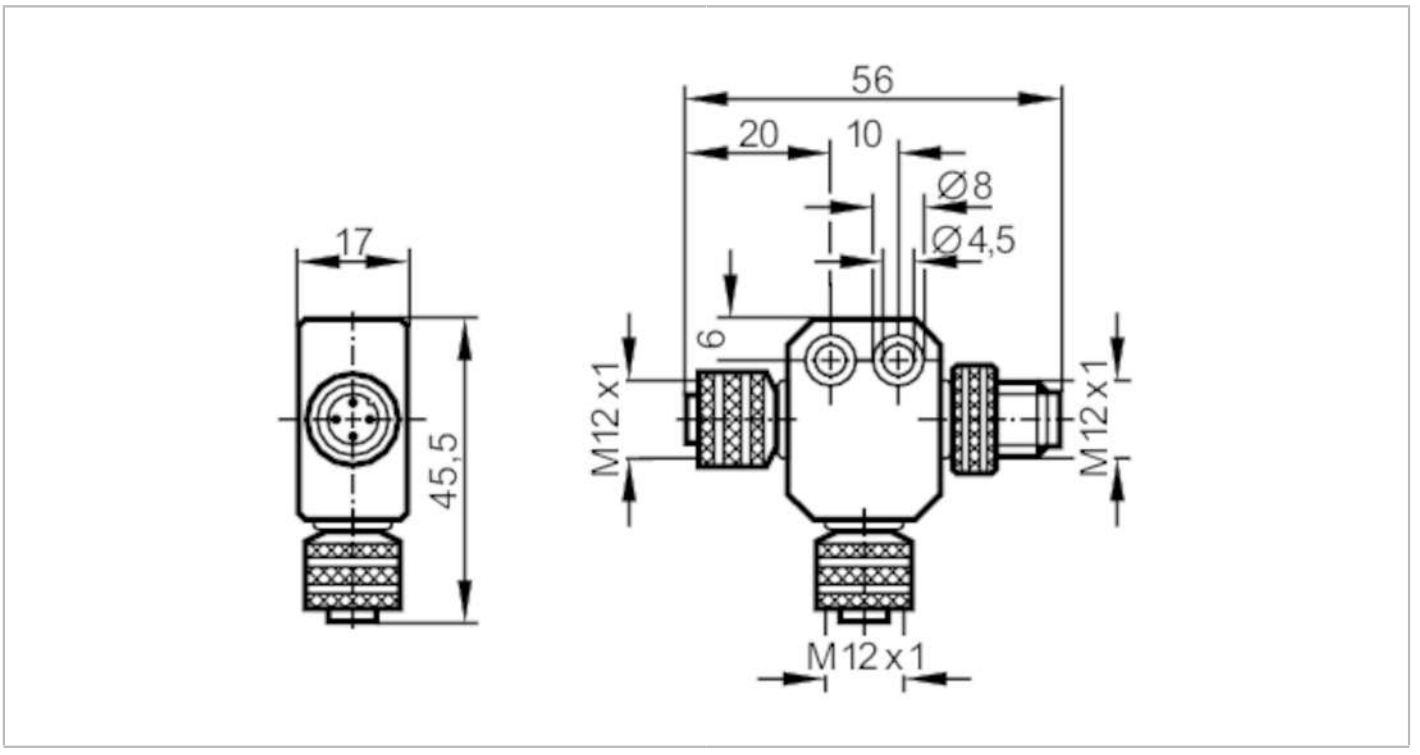

Application		
Design		for pressure sensors PNI
Electrical data		
Operating voltage	[V]	< 30 AC / < 36 DC
Max. current load per module/slot	[A]	3
Max. current load total	[A]	3
Operating conditions		
Ambient temperature	[°C]	-25...90
Protection		IP 68
Mechanical data		
Weight	[g]	38
Materials		PUR
Remarks		
Remarks		orientation connectors A/B vertical (for a vertical sensor)
Pack quantity		1 pcs.

E11696

T-splitter

Y-splitter/STM12/2xUS

Electrical connection

Connection

