
R15 - 2 CO

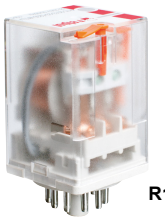
R15 - 3 CO

• Relays of general application • For plug-in sockets: 35 mm rail mount acc. to PN-EN 60715; on panel mounting; solder terminals • Contacts AgNi • Coils AC and DC • WT (mechanical indicator + lockable front test button) - standard features of relays in cover, for plug-in sockets. Relays may be provided with the test buttons (no latching) and plugs - page 7 • **Have obtained LR Type Approval Certificate (Lloyd's Register)** • Recognitions, certifications, directives: RoHS, AUCOTEAM GmbH Berlin - railroad standard,

Contact data

Number and type of contacts		2 CO, 3 CO
Contact material		**AgNi**, AgNi/Au flash gold plating, AgNi/Au hard gold plating
Rated / max. switching voltage	AC	250 V / 440 V
Min. switching voltage		10 V AgNi, 10 V AgNi/Au flash gold plating 5 V AgNi/Au hard gold plating
Rated load (capacity)	AC1	10 A / 250 V AC 10 A / 277 V AC UL 508
	AC15	3 A / 120 V 1,5 A / 240 V (B300)
	AC3	370 W (single-phase motor; 0,5 HP / 240 V AC UL 508)
	DC1	10 A / 24 V DC (see Fig. 3)
	DC13	0,22 A / 120 V 0,1 A / 250 V (R300)
Min. switching current		5 mA
Max. inrush current		20 A
Rated current		10 A
Max. breaking capacity	AC1	2 500 VA
Min. breaking capacity		0,3 W AgNi, 0,3 W AgNi/Au flash gold plating 0,05 W AgNi/Au hard gold plating
Contact resistance		≤ 100 mΩ
Max. operating frequency		
• at rated load	AC1	1 200 cycles/hour
• no load		12 000 cycles/hour

Coil data

Rated voltage	50/60 Hz AC	6 ... 240 V
	DC	6 ... 220 V
Must release voltage		AC: ≥ 0,15 U_n DC: ≥ 0,1 U_n
Operating range of supply voltage		see Tables 1, 2
Rated power consumption	AC	2,8 VA 50 Hz 2,5 VA 60 Hz
	DC	1,5 W

Insulation according to PN-EN 60664-1

Insulation rated voltage		250 V AC
Rated surge voltage		2 500 V 1,2 / 50 µs
Overvoltage category		III
Insulation pollution degree		3
Dielectric strength		
• between coil and contacts		2 500 V AC type of insulation: basic
• contact clearance		1 500 V AC type of clearance: micro-disconnection
• pole - pole		2 000 V AC type of insulation: basic
Contact - coil distance	• clearance	≥ 3 mm
	• creepage	≥ 4,2 mm

General data

Operating / release time (typical values)		AC: 12 ms / 10 ms DC: 18 ms / 7 ms
Electrical life		
• resistive AC1		> 2 x 10^5 10 A, 250 V AC
• cosφ		see Fig. 2
Mechanical life (cycles)		> 2 x 10^7
Dimensions (L x W x H)		35 x 35 x 54,4 mm
Weight		83 g
Ambient temperature	• storage	-40...+85 °C
	• operating	AC: -40...+55 °C DC: -40...+70 °C
Cover protection category		IP 40 PN-EN 60529
Environmental protection		RTI PN-EN 116000-3
Shock resistance		10 g
Vibration resistance		5 g 10...150 Hz
Solder bath temperature		max. 270 °C
Soldering time		max. 5 s

The data in bold type relate to the standard versions of the relays.

Dimensions - plug-in version (WT), with lockable front test button type T

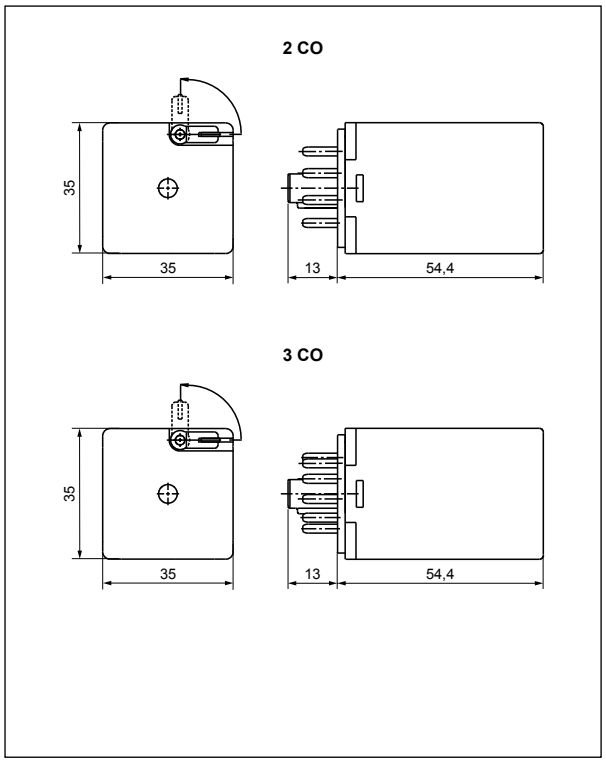

Dimensions - plug-in version, with test button (no latching) or with plug (no manual operation)

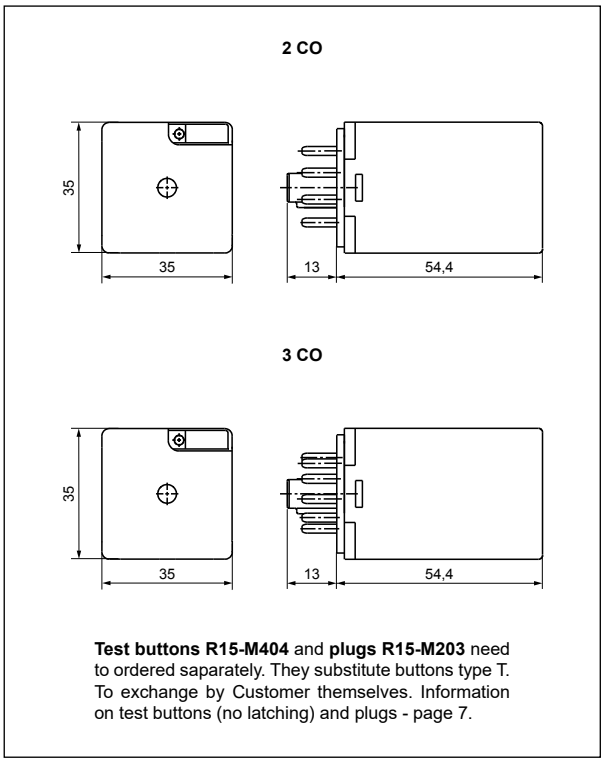

Test buttons R15-M404 and **plugs R15-M203** need to ordered saparately. They substitute buttons type T. To exchange by Customer themselves. Information on test buttons (no latching) and plugs - page 7.

Mounting

Relays R15 - 2 CO, 3 CO are offered in versions: • for plug-in sockets. **With WT features as standard** (**W** - mechanical indicator + **T** - lockable front test button). In these relays is **possibility self-exchange of button type T for test button R15-M404** (no latching) **or on plug R15-M203** (no manual operation). The buttons **R15-M404** and the plugs **R15-M203 need to ordered saparately**.

Relays **R15 - 2 CO** are designed for: • screw terminals plug-in sockets **PZ8** with clip **PZ11 0031**, 35 mm rail mount acc. to PN-EN 60715 or on panel mounting with two M3 screws • screw terminals plug-in sockets **GZU8** with clip **GZU 1052**, 35 mm rail mount acc. to PN-EN 60715 • screw terminals plug-in sockets **GZ8** with clip **GZ 1050**, on panel mounting with two M3 screws • screw terminals plug-in sockets **GZP8** with clip **GZP-0054**, 35 mm rail mount acc. to PN-EN 60715 or on panel mounting with two M3 screws • solder terminals sockets **GOP8** with clip **R159 1051** and spring clamp **R15 5922**.

Relays **R15 - 3 CO** are designed for: • screw terminals plug-in sockets **PS11** and **PZ11** with clip **PZ11 0031**, 35 mm rail mount acc. to PN-EN 60715 or on panel mounting with two M3 screws • screw terminals plug-in sockets **GZU11** with clip **GZU 1052**, 35 mm rail mount acc. to PN-EN 60715 • screw terminals plug-in sockets **GZ11** with clip **GZ 1050**, on panel mounting with two M3 screws • screw terminals plug-in sockets **GZP11** with clip **GZP-0054**, 35 mm rail mount acc. to PN-EN 60715 or on panel mounting with two M3 screws • solder terminals sockets **GOP11** with clip **R159 1051** and spring clamp **R15 5922**.

Electrical life at AC resistive load.
Switching frequency: 1 200 cycles/hour Fig. 1

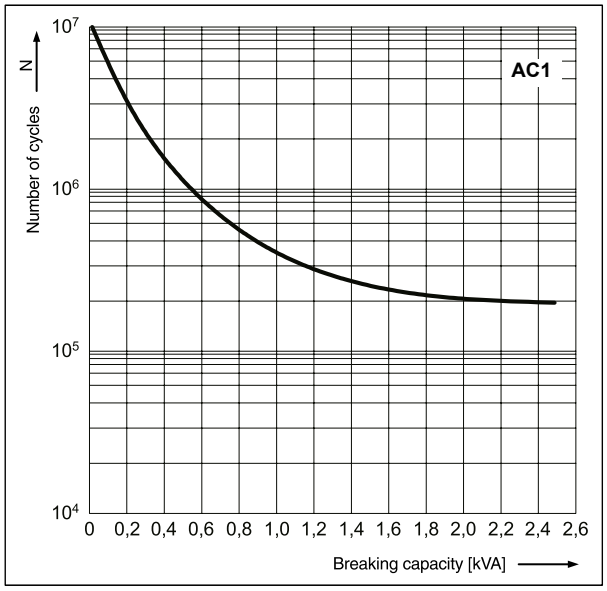

Electrical life reduction factor at AC inductive load Fig. 2

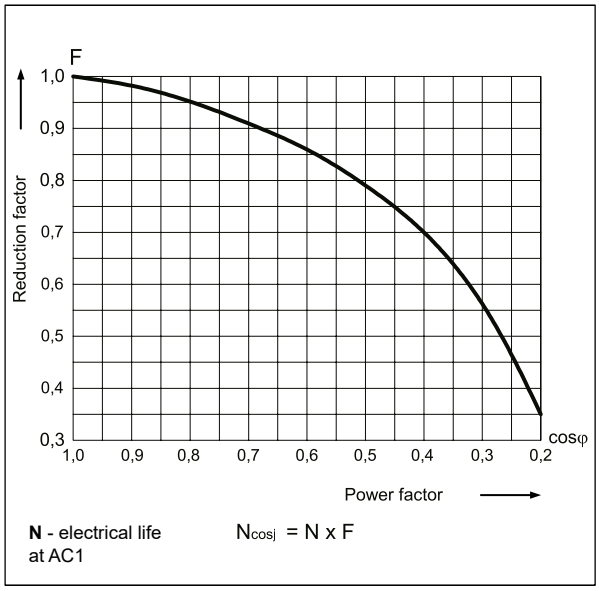

N - electrical life at AC1

$N_{cosj} = N \times F$

Max. DC breaking capacity
A - resistive load DC1
B - inductive load L/R = 40 ms Fig. 3

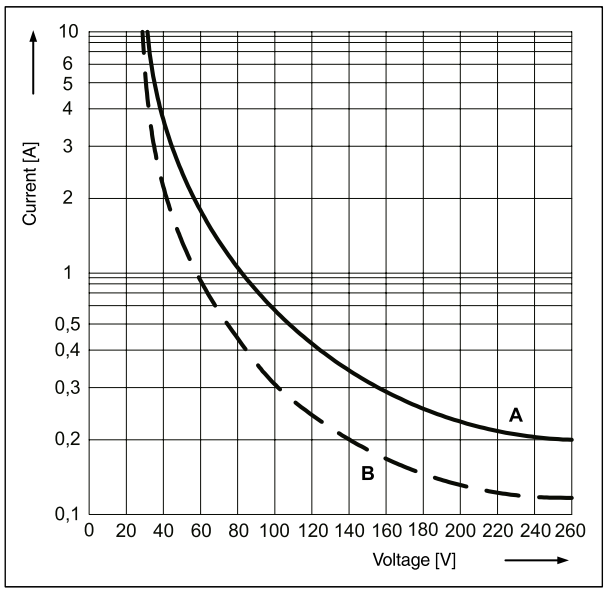

Connection diagrams (pin side view)

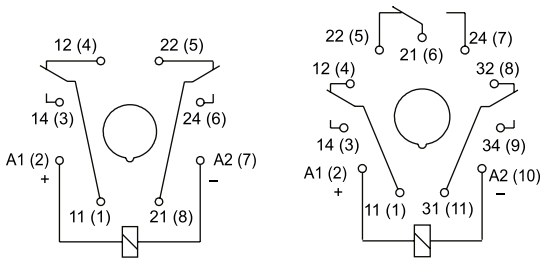

Note: the indicated polarity of the supply refers to the relays with extra equipment **D** - surge suppression element (diode) - for DC coils only.

19.04.2016

Export Sales Department phone +48 68 47 90 832, 951 • e-mail: export@relpol.com.pl

Coil data - DC voltage version — Table 1

Coil code	Rated voltage V DC	Coil resistance at 20 °C Ω	Acceptable resistance	Coil operating range V DC	
				min. (at 20 °C)	max. (at 70 °C)
1006	6	28	± 10%	4,8	6,6
1012	**12**	**110**	**± 10%**	**9,6**	**13,2**
1024	**24**	**430**	**± 10%**	**19,2**	**26,4**
1048	48	1 750	± 10%	38,4	52,8
1060	60	2 700	± 10%	48,0	66,0
1110	110	9 200	± 10%	88,0	121,0
1120	120	11 000	± 10%	96,0	132,0
1220	**220**	**37 000**	**± 10%**	**176,0**	**242,0**

The data in bold type relate to the standard versions of the relays.

Coil data - AC 50/60 Hz voltage version — Table 2

Coil code	Rated voltage V AC	Coil resistance at 20 °C Ω	Acceptable resistance	Coil operating range V AC	
				min. (at 20 °C)	max. (at 55 °C)
5006	6	4,3	± 15%	4,8	6,6
5012	12	18,5	± 15%	9,6	13,2
5024	**24**	**75**	**± 15%**	**19,2**	**26,4**
5048	48	305	± 15%	38,4	52,8
5060	60	475	± 15%	48,0	66,0
5115	115	1 840	± 15%	92,0	126,5
5120	120	1 910	± 15%	96,0	132,0
5220	220	6 980	± 15%	176,0	242,0
5230	**230**	**7 080**	**± 15%**	**184,0**	**253,0**
5240	240	7 760	± 15%	192,0	264,0

The data in bold type relate to the standard versions of the relays.



Ordering codes

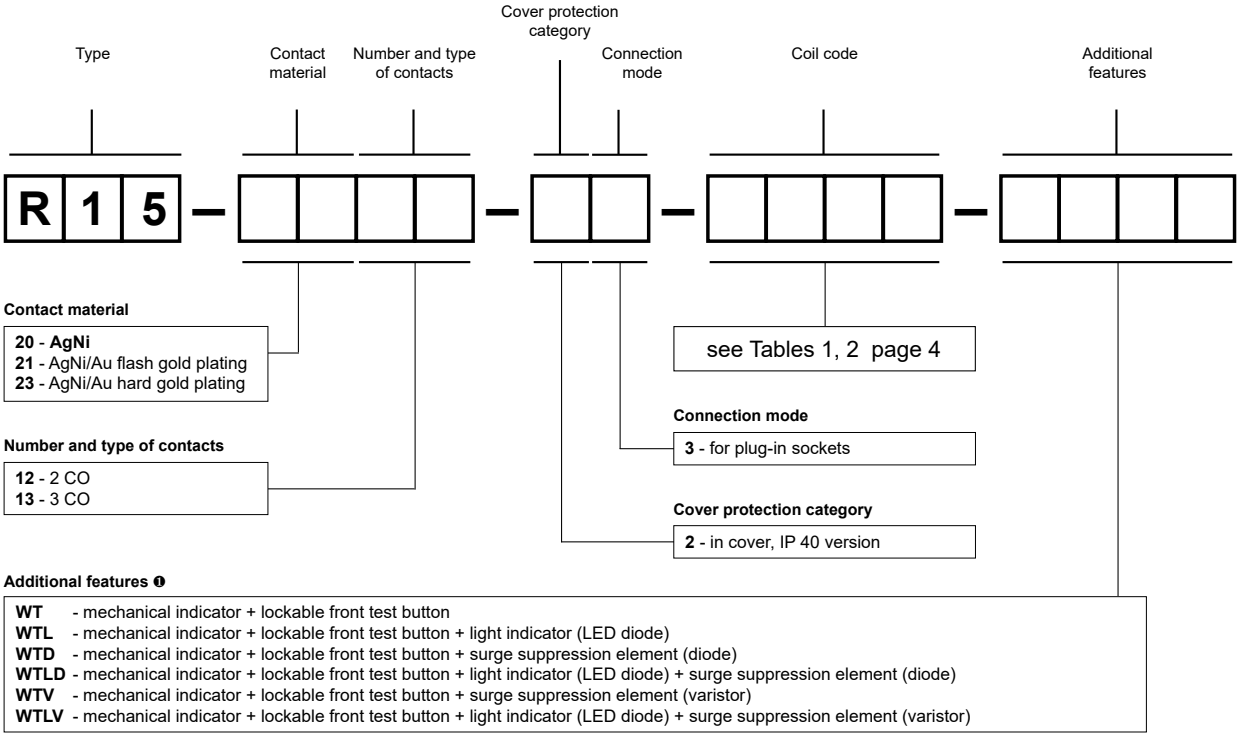

❶ **WT** - standard features of relays for plug-in sockets. **WTD, WTLD** - only for DC coils, **WTV, WTLV** - only for AC coils

Test buttons (no latching) and plugs need to ordered saparately. They substitute buttons type T. To exchange by Customer themselves. Information on test buttons (no latching) and plugs - page 7.

- Button R15-M404-A - orange colour (AC coils)
- Button R15-M404-D - green colour (DC coils)
- Plug R15-M203-A - orange colour (AC coils)
- Plug R15-M203-D - green colour (DC coils)

Note:

While the relay operates, the test button of the **T** type becomes heated. In order to push the test button manually, you should first turn the supply voltage off, and wait some time until the button becomes colder (or push the button immediately using a protective glove or an insulated tool). The button shall be pushed smoothly and quickly. The normally open contacts are closed with the button for the time during which the button is pushed. Releasing the button opens the normally open contacts. Normally open contacts may be closed with the blocking function of the button (it shall be turned by 90°). When the button is turned back, the normally open contacts are opened.

For relays with additional features **D** - surge suppression element (diode) (versions WTD and WTLD) - fixed supply polarity compulsory for the DC load of coils: +A1(2) / -A2(7) for R15 - 2 CO and +A1(2) / -A2(10) for R15 - 3 CO. The polarity is indicated on the relay cover. For other versions of the relays with DC coils any polarity is possible.

Examples of ordering codes:

R15-2012-23-1024-WT relay **R15**, for plug-in sockets, two changeover contacts, contact material AgNi, coil voltage 24 V DC, with mechanical indicator and lockable front test button, in cover IP 40

R15-2013-23-5230-WTL relay **R15**, for plug-in sockets, three changeover contacts, contact material AgNi, coil voltage 230 V AC 50/60 Hz, with mechanical indicator and lockable front test button and light indicator (LED diode), in cover IP 40

Industrial relays for plug-in sockets: R2N, R3N, R4N, R15 - 2 CO ❷, R15 - 3 CO ❷ **with WT features as standard** (**W** - mechanical indicator + **T** - lockable front test button). **Detailed information** on additional features of individual relays can be found in the data sheets on the side of "Ordering codes".

Note:
While the relay operates, the test button of the **T** type becomes heated. In order to push the test button manually, you should first turn the supply voltage off, and wait some time until the button becomes colder (or push the button immediately using a protective glove or an insulated tool). The button shall be pushed smoothly and quickly. The normally open contacts are closed with the button for the time during which the button is pushed. Releasing the button opens the normally open contacts. Normally open contacts may be closed with the blocking function of the button (it shall be turned by 90°). When the button is turned back, the normally open contacts are opened.

Type ❶	Description	For industrial relays
W	mechanical indicator	R2N, R3N, R4N, (R15 - 2 CO, 3 CO ❷)
T	lockable front test button, orange colour - AC coils, green colour - DC coils	R2N, R3N, R4N, (R15 - 2 CO, 3 CO ❷)
L	light indicator (LED diode), located inside the relay	R2N, R3N, R4N, RY2, (R15 - 2 CO, 3 CO, 4 CO ❷) RUC, RUC-M
D	surge suppression element (diode) - only for DC coils	R2N, R3N, R4N, RY2, (R15 - 2 CO, 3 CO, 4 CO ❷)
V	surge suppression element (varistor) - only for AC coils	(R15 - 2 CO, 3 CO ❷)
K	test button without block function	(R15 - 4 CO ❷), RUC

❶ Available combinations:
WT, WTL, WTD, WTLD - in relays R2N, R3N, R4N for plug-in sockets
L, D, LD - in relays RY2 for plug-in sockets
WT, WTL, WTD, WTLD, WTV, WTLV - in relays R15 - 2 CO, 3 CO for plug-in sockets
K, L, D, KL, KD, LD, KLD - in relays R15 - 4 CO for plug-in sockets
K, L, KL - in relays RUC
L - in relays RUC-M
❷ Voltage versions, in covers

Test buttons type T R15 - 2 CO, 3 CO

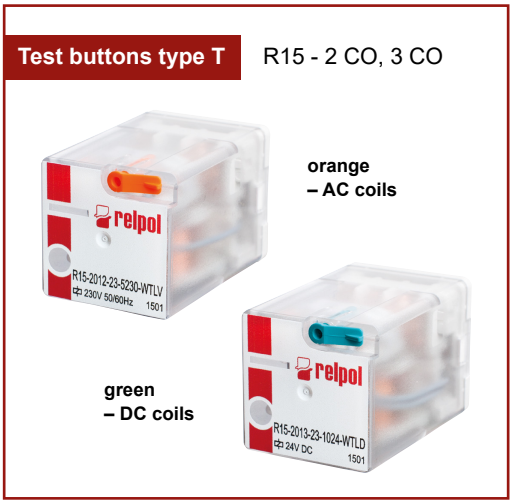

19.04.2016

Export Sales Department phone +48 68 47 90 832, 951 • e-mail: export@relpol.com.pl

Test buttons (no latching) are recommended for R2N...WT, R3N...WT, R4N...WT, R15...WT 2 CO, R15...WT 3 CO relays - **for applications that do not allow permanent contact latching**. By manual operation (pressing the button) relay contacts can get switched for as long time as long the button is pressed. Contacts return to initial position as soon as pressure is released from the button. Those operations can be done while the coil is deenergized ❸.

Button **R4P-0001** or **R15-M404** can be easily inserted by the Customer after removal of button type **T** (see Fig. 2). Button type **T** can be removed with screwdriver as shown on Fig. 1.

❸ While the relay operates, the test button becomes heated. In order to push the test button manually, you should first turn the supply voltage off, and wait some time until the button becomes colder (or push the button immediately using a protective glove or an insulated tool). The button shall be pushed smoothly and quickly.

Fig. 1



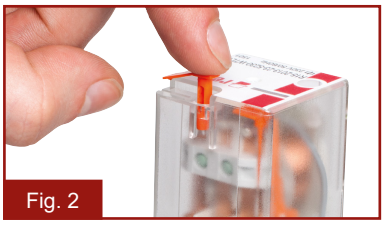

Fig. 2

Dimensions - test button **R4P-0001**
for **R2N...WT, R3N...WT, R4N...WT**

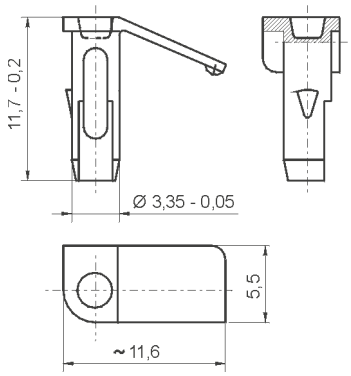

Types of buttons:
R4P-0001-A - orange colour (AC coils)
R4P-0001-D - green colour (DC coils)

Dimensions - test button **R15-M404**
for **R15...WT 2 CO, R15...WT 3 CO**

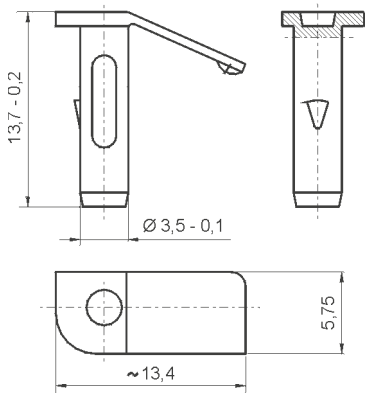

Types of buttons:
R15-M404-A - orange colour (AC coils)
R15-M404-D - green colour (DC coils)

Plugs R4W-0003 or **R15-M203** can substitute button type **T if manual operation (latching and testing) is not allowed**. Changing button type **T** for plug can be done by Customer themselves in the same way as changing button type **T** for button (no latching).

Dimensions - plug **R4W-0003**
for **R2N...WT, R3N...WT, R4N...WT**

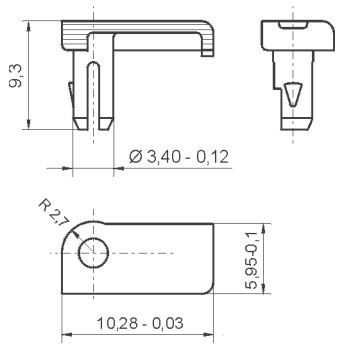

Types of plugs:
R4W-0003-A - orange colour (AC coils)
R4W-0003-D - green colour (DC coils)

Dimensions - plug **R15-M203**
for **R15...WT 2 CO, R15...WT 3 CO**

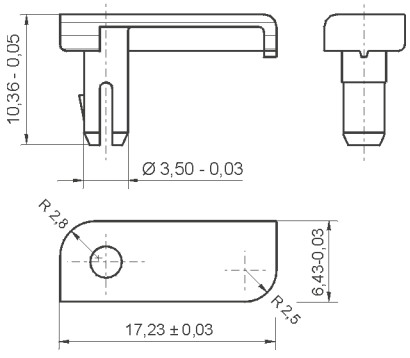

Types of plugs:
R15-M203-A - orange colour (AC coils)
R15-M203-D - green colour (DC coils)

PZ8 ❶

For R15 - 2 CO

Screw terminals
Max. tightening moment
for the terminal: 0,7 Nm
35 mm rail mount
acc. to PN-EN 60715
or on panel mounting
68,2 x 38 x 24,2 mm
Two poles
10 A, 250 V AC

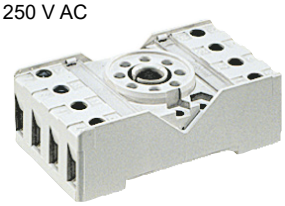

Connection diagram

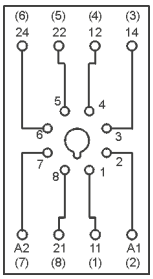

Accessories



PZ11 0031

Dimensions

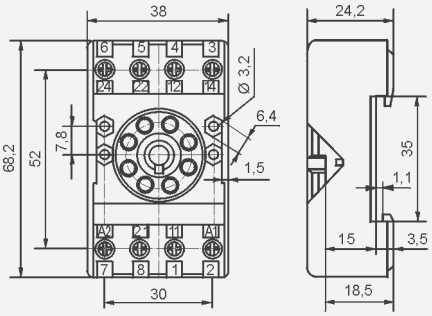

GZU8

For R15 - 2 CO

Screw terminals
Max. tightening moment
for the terminal: 0,7 Nm
35 mm rail mount
acc. to PN-EN 60715
82 x 35,5 x 25,7 mm
Two poles
10 A, 300 V AC



Connection diagram

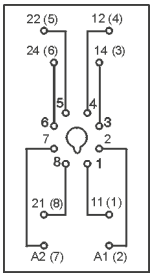

Accessories



GZU 1052

Adaptor

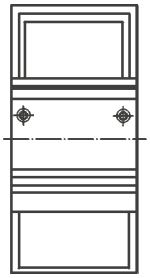

Dimensions

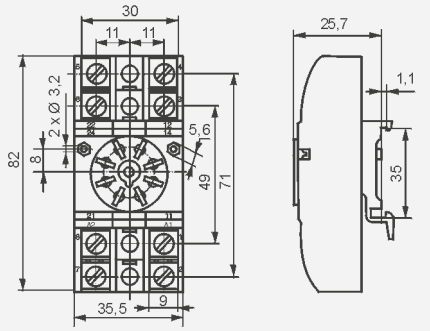

GZ8

For R15 - 2 CO

Screw terminals
Max. tightening moment
for the terminal: 0,7 Nm
On panel mounting
82,8 x 35,5 x 22,5 mm
Two poles
10 A, 300 V AC



Connection diagram

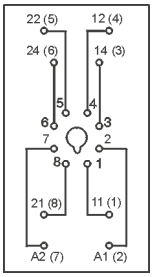

Accessories



GZ 1050

Mounting dimensions

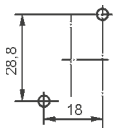

Dimensions

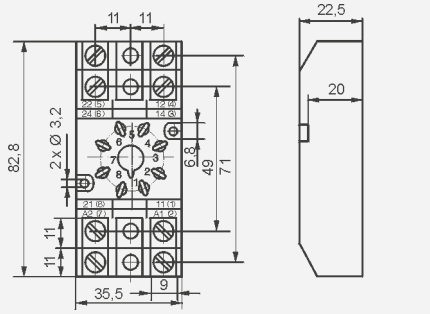

GZP8

For R15 - 2 CO

Screw terminals
Max. tightening moment
for the terminal: 0,5 Nm
35 mm rail mount
acc. to PN-EN 60715
or on panel mounting
73 x 38,2 x 27,2 mm
Two poles
12 A, 300 V AC



Connection diagram

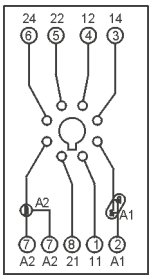

Accessories



GZP-0054



Time module COM3



GZP-0035

Dimensions

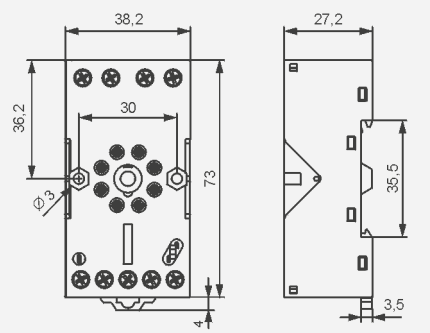

❶ Have obtained LR Type Approval Certificate (Lloyd's Register).

19.04.2016

Export Sales Department phone +48 68 47 90 832, 951 • e-mail: export@relpol.com.pl

GOP8

For R15 - 2 CO

Solder terminals
47,2 x 32 x 22 mm
Two poles
10 A, 250 V AC



Accessories


R159 1051


R15 5922

Dimensions

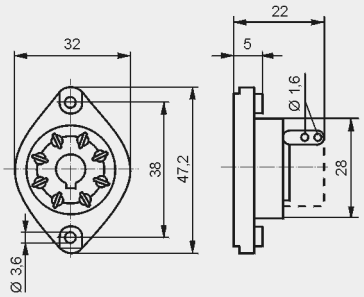

PS11 ❶

For R15 - 3 CO

Screw terminals
Max. tightening moment
for the terminal: 0,7 Nm
35 mm rail mount
acc. to PN-EN 60715
or on panel mounting
68,2 x 38 x 24,2 mm
Three poles
10 A, 250 V AC



Connection diagram

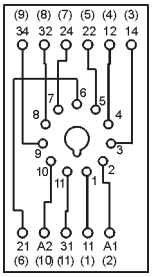

Accessories


PZ11 0031

Dimensions

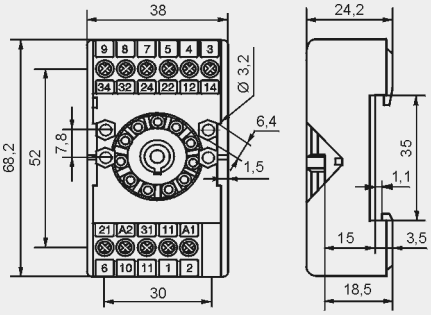

PZ11 ❶

For R15 - 3 CO

Screw terminals
Max. tightening moment
for the terminal: 0,7 Nm
35 mm rail mount
acc. to PN-EN 60715
or on panel mounting
68,2 x 38 x 24,2 mm
Three poles
10 A, 250 V AC

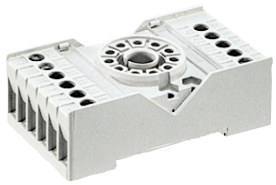

Connection diagram

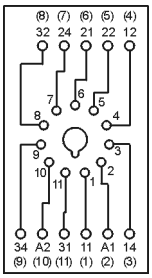

Accessories


PZ11 0031

Dimensions

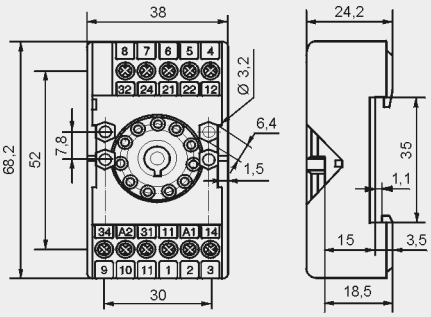

GZU11

For R15 - 3 CO

Screw terminals
Max. tightening moment
for the terminal: 0,7 Nm
35 mm rail mount
acc. to PN-EN 60715
82 x 35,5 x 25,7 mm
Three poles
10 A, 250 V AC



Connection diagram

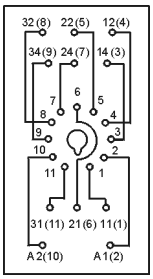

Adaptor

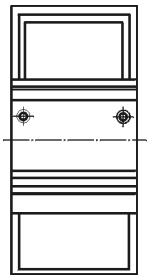

Accessories


GZU 1052

Dimensions

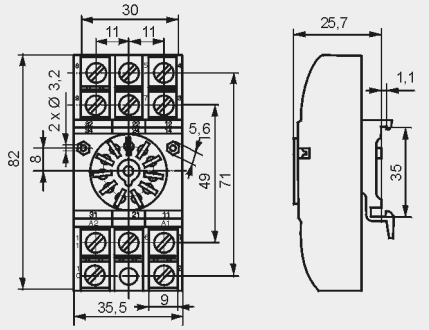

❶ Have obtained LR Type Approval Certificate (Lloyd's Register).

GZ11

For R15 - 3 CO

Screw terminals
Max. tightening moment
for the terminal: 0,7 Nm
On panel mounting
82,8 x 35,5 x 22,5 mm
Three poles
10 A, 250 V AC

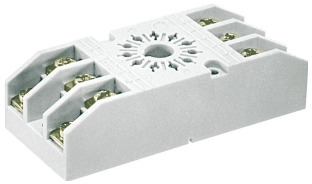

Connection diagram

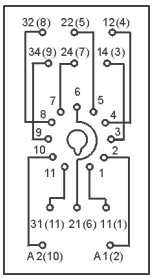

Mounting dimensions

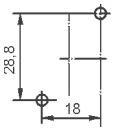

Dimensions

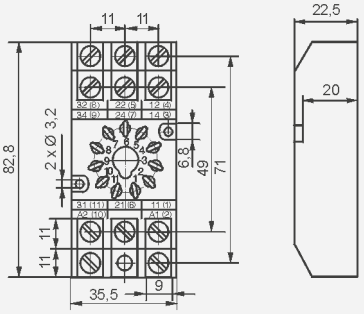

Accessories



GZ 1050

GZP11

For R15 - 3 CO

Screw terminals
Max. tightening moment
for the terminal: 0,5 Nm
35 mm rail mount
acc. to PN-EN 60715
or on panel mounting
73 x 38,2 x 27,2 mm
Three poles
12 A, 300 V AC

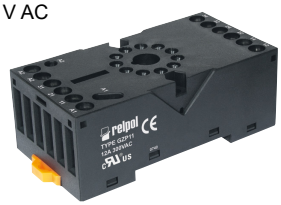

Connection diagram

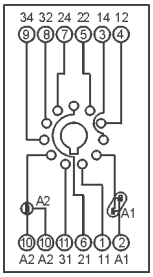



Time module COM3



GZP-0054



GZP-0035

Accessories

Dimensions

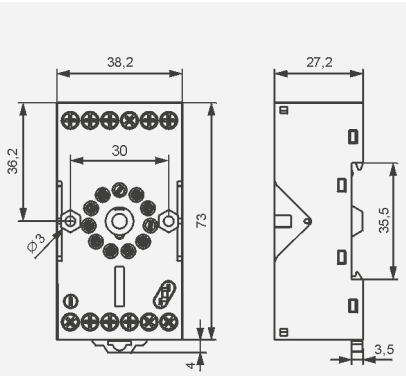

GOP11

For R15 - 3 CO

Solder terminals
47,2 x 32 x 22 mm
Three poles
10 A, 250 V AC





R159 1051



R15 5922

Accessories

Dimensions

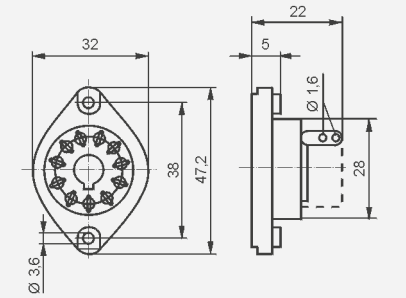

PRECAUTIONS:

1. Ensure that the parameters of the product described in its specification provide a safety margin for the appropriate operation of the device or system and never use the product in circumstances which exceed the parameters of the product. **2.** Never touch any live parts of the device. **3.** Ensure that the product has been connected correctly. An incorrect connection may cause malfunction, excessive heating or risk of fire. **4.** In case of any risk of any serious material loss or death or injuries of humans or animals, the devices or systems shall be designed so to equip them with double safety system to guarantee their reliable operation.