Reflection light scanner

RLK39-8-800/31/40a/116

with terminal compartment

CE



- Sensing range up to 800 mm
- Pre-fault indication and output
- Light/dark ON, switchable
- Supplied with mounting accessory
- Protection degree IP66
- Direct/alternating voltage
- Relay output

Date of edition 04/05/03

Subject to reasonable modifications due to technical advances. Copyright Pepperl+Fuchs, Printed in Germany

Pepperl+Fuchs Group • Tel.: Germany +49 621 776-0 • USA +1 330 4253555 • Singapore +65 67799091 • Internet http://www.pepperl-fuchs.com

General specifications	
Detection range	0 ... 800 mm
Light source	IRED
Approvals	CE
Adjustment range	65 ... 800 mm
Reference target	standard white 200 mm x 200 mm
Light type	Alternating light
Ambient light limit	10000 Lux
Indicators/operating means	
Function display	LED yellow: switching state LED red: pre-fault indication
Operating elements	sensitivity adjuster
Operating elements	Light/dark switch
Electrical specifications	
Operating voltage	12 ... 240 V DC 24 ... 240 V AC 50 ... 60 Hz)
Ripple	10 %
No-load supply current I_0	≤ 35 mA
Power consumption P_0	≤ 3 VA
Time delay before availability t_v	≤ 50 ms
Output	
Switching type	light/dark switching
Signal output	1 relay output / NO
Switching voltage	≤ 240 V AC ≤ 30 V DC
Switching current	≤ 3 A
Voltage drop U_d	≤ 3 V
Switching frequency f	≤ 25 Hz
Response time	≤ 20 ms
Standard conformity	
Standards	EN 60947-5-2
Ambient conditions	
Ambient temperature	-25 ... 55 °C (248 ... 328 K)
Storage temperature	-40 ... 55 °C (233 ... 328 K)
Mechanical specifications	
Protection degree	IP50
Connection	terminal compartment PG9, ≤ 2.5 mm^2
Material	
Housing	PBT
Optical face	PMMA
Mass	110 g

Date of edition 04/05/03

Subject to reasonable modifications due to technical advances. Copyright Pepperl+Fuchs, Printed in Germany

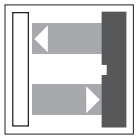

RLK39-8-800/31/40a/116

Curves/Diagrams

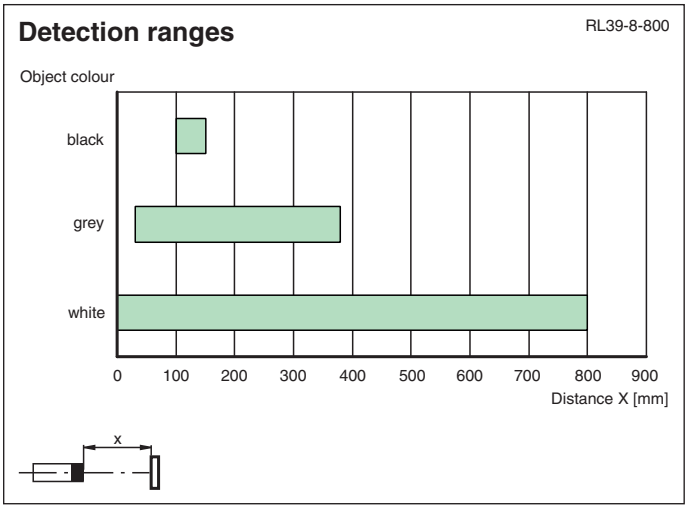

Date of edition 04/05/03

Subject to reasonable modifications due to technical advances.
Copyright Pepperl+Fuchs, Printed in Germany
Pepperl+Fuchs Group • Tel.: Germany +49 621 776-0 • USA +1 330 4253555 • Singapore +65 67799091 • Internet http://www.pepperl-fuchs.com

Dimensions

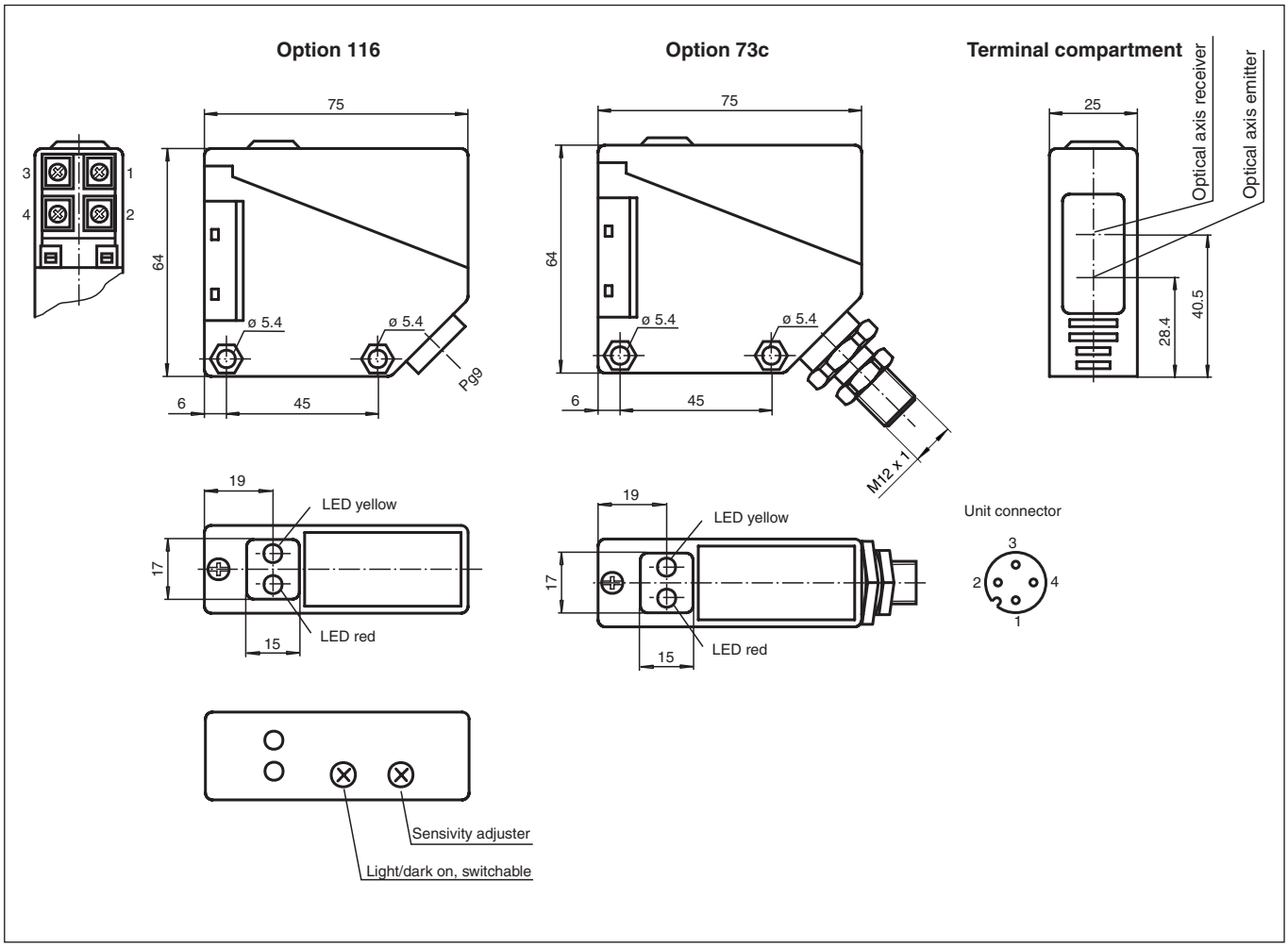

Electrical connection

31/40a

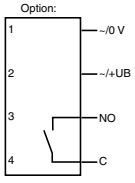

❍ = light on, ● = dark on

Date of edition 04/05/03

Subject to reasonable modifications due to technical advances. Copyright Pepperl+Fuchs, Printed in Germany