Sauter GmbH
Ziegelei 1
D-72336 Balingen
E-Mail: info@kern-sohn.com

Tel.: +49-[0]7433- 9933-0
Fax: +49-[0]7433-9933-149
Internet: www.sauter.eu

Instruction Manual
Digital Force Gauge

SAUTER FH-M

V. 1.8
06/2017
GB

Sensor
Outside



PROFESSIONAL MEASURING

FH-M-BA-e-1718

GB

SAUTER FH-M

V. 1.8 06/2017 **Instruction Manual**

Digital Force Gauge

Thank you for buying a SAUTER force gauge with an internal load cell. We hope you are pleased with your high quality measuring instrument with its big functional range. If you have any queries, wishes or helpful suggestions, do not hesitate to call our service number.

Summarize:

1 Introduction 3

2 Scope of delivery 3

3 Working conditions 4

4 Specifications 4

5 Electrical Power Supply 4

6 Operation 5

6.1 Operation keys 5

7 Configuration of RS 232 interface 8

7.1 Output Protocol 9

8 Warnings 10

9 Adjustment Procedure FH 12

1 Introduction

Annotation: Please read the remarks in this instruction manual carefully before the first use, even if you are already experienced with our SAUTER measuring devices. After receipt of your force gauge, please check the instrument, whether any transport damages have occurred. Please check, whether the outer packaging, the plastic housing or any other parts or even the instrument itself have been damaged. If any damages are determined, please inform SAUTER immediately.

„Sensor outside“means, that the load cell is outside the housing, connected by a cable with the display unit.

SAUTER offers suitable software and a wide range of accessories optionally. So you are able to configure your measuring instrument more versatile. Please ask us at SAUTER or your SAUTER reseller or just visit us on our website www.sauter.eu

2 Scope of delivery

- SAUTER FH-M, incl. rechargeable battery
- Carrying Case
- Charger
- 5 pieces M3 x 8 screws for fixation on all SAUTER Test Stands

.

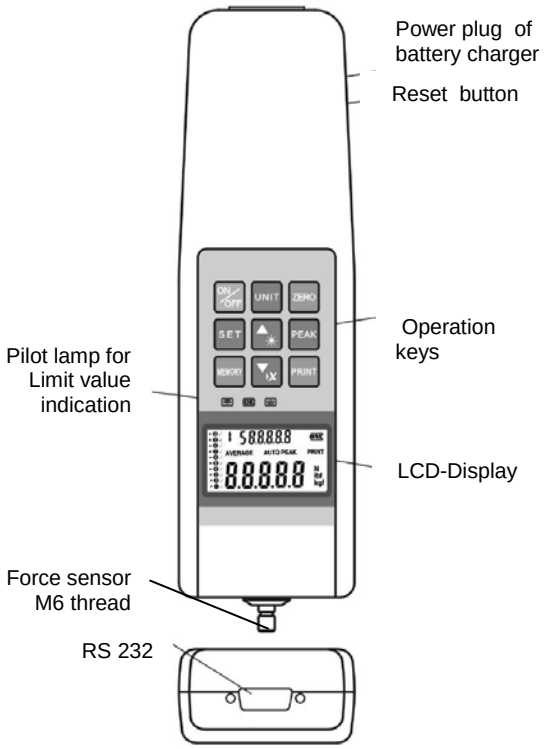

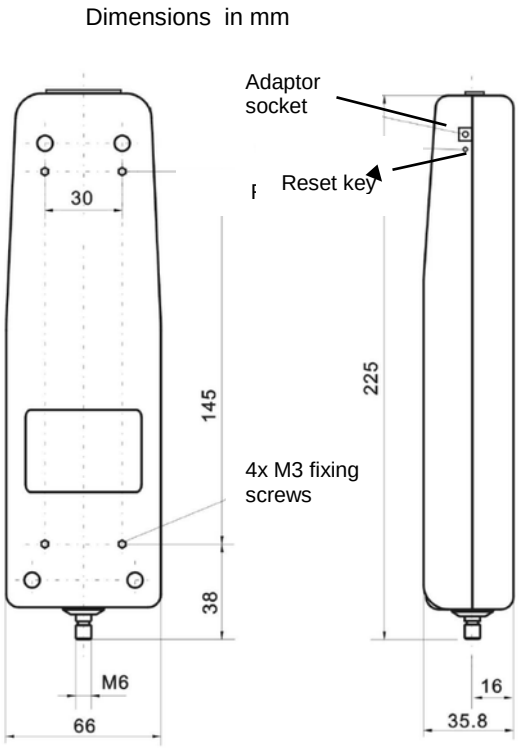

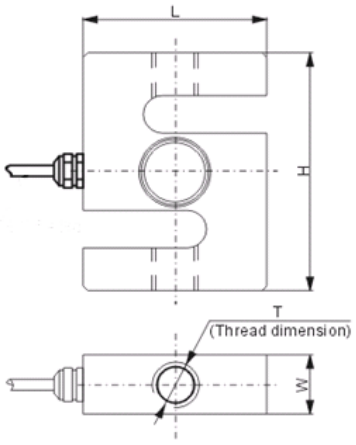

External load cell connected by a cable with the display unit, See photo on the cover sheet

Max.charge	L x W x H	Thread type	Cable length
1 kN	76,2x50,8x19,0 mm	M12 x 1,75	Ca. 2,5m
2 kN	76,2x50,8x19,0 mm	M12 x 1,75	
5 kN	76,2x50,8x28,2 mm	M12 x 1,75	
10 kN	76,2x50,8x28,2 mm	M12 x 1,75	
20 kN	76,2x50,8x28,2 mm	M12 x 1,75	
50 kN	108x76,2x25,4 mm	M18 x 1,5	
100 kN	177,8x125,0x50,8 mm	M30 x 2,0	

Important annotation:

By pressing the **RESET key** (on the right side of housing, see illustration on page 3), individual settings and memorised values can be re-set or erased, in example for a new start of the instrument after an operating error.

You will find the **description of mounting all force gauges on SAUTER Test stands** in the instruction manuals of the correspondent test stands.

3 Working conditions

10°C up to 30°C / 15% up to 80% humidity

4 Specifications

- Measurement uncertainty: ± 0,5 % of Max (measurement range)
- Measurement frequency: 2.000 Hz
- Weight: 640 g (display unit without external load cell)

5 Electrical Power Supply

Either by rechargeable battery or current power supply

Current power supply:

- Connection by power adapter
- Rechargeable batteries are charged simultaneously

Rechargeable battery pack for mobile applications:

- Type: Ni 8.4V / 600 mAh
- Charging time: approx. 1 hour. As soon as the gauge is connected to the electric circuit by the charging cable, the integrated battery will be recharged.
- Battery operating time: about 15 hours.

6 Operation

Display

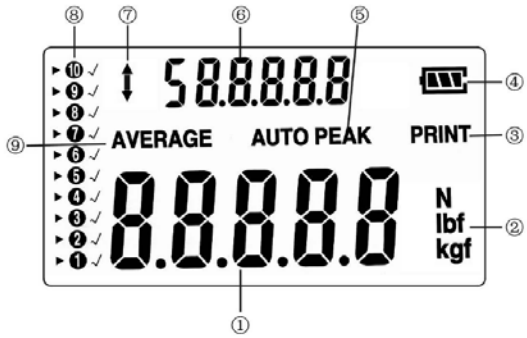

(1) Measurement result
(2) Unit of measurement result
(3) Activation of print function
(4) Charge level indicator of battery
(5) PEAK shows that Peak-Hold mode is activated
AUTO PEAK displays the Peak value only for a definite time
(6) Average value respectively single Peak value
(7) Indication of force direction
(8) Occupancy of memory spaces
(9) AVERAGE- respectively memory mode

6.1 Operation keys

ON / OFF: ON /OFF key (switch ON, press about 1 sec.)

UNIT: Measurement units

- Press shortly: select units between N, kg and lb
- Press for 2 sec: Display reversion

ZERO: Zeroing

Three functions:
- Zeros the measuring result (Tare function)
- Cleans the peak value (in Peak mode)
- Saves a setting (in SET mode)

SET: SET

SET - 1 x Press: Upper Limit value [HidT / Hi Lt]. To change, press: ▲ or ▼ (see section High/Low Limit function)

- Hi Lt

SET - 1 x Press: Lower Limit value [LodT]. To change press ▲ or ▼ (see section High/Low Limit function)

Lo dT

SET - 1 x Press: Minimum limit value to activate memory function at limit value measurements (PEAK). [LE.SET / Lo Pe] (also see section „Min Peak Limit value function)“.
- To change, press: ▲ or ▼ (Only active in „Peak-Mode“, see section limit value indication)

Lo Pe

SET - 1 x Press: Sets the Auto-STOP force value that stops the movement of the test stand when reaching a limit force. Adjustment of the force limit.
- To change, press: ▲ or ▼

StoP

SET - 1 x Press: Auto-OFF Function. Turns the instrument off after a here defined period of time in sec. [P.OFF]. To change, press: ▲ or ▼ (Only active in „battery-Mode“)

P.OFF

SET - 1 x Press: Peak-Freeze-Time [PE.2E / A.PE / HoldT]: period of time (in sec.) in which a peak value is being shown in the display (PEAK).
- To change press: ▲ or ▼

HoldT

SET - 1 x Press: Optional data transfer [rS232] to PC (PC) or to the printer (Print) or (in version U 5.3) to the test stand (stand)

rS232

SET
- PC: Pressing SET 1x: Saves the Settings
- PRINT: Pressing SET 2x: sending data to the printer
- STAND: Pressing SET 3x: sending a signal to the test stand to stop the movement (in version U 5.3)

BACK LIGHT: 

PEAK: (Peak value) 

Three functions available:

- Track mode (continuous measurement)
- Peak mode (capturing max. values)
- Auto-Peak mode, same as Peak-mode, but without the „Minimum limit value“ function

MEMORY: (Memory function) 

Memorizes the Peak values to calculate the average value of the measurement results (see chapter “memorizing Peak values”)

DELETE Function of memorized values (only active in „Memory“ mode) 

PRINT: (Print function) 

Sends the stored peak values to a PC or Printer (please see chapter 6.1)

High / Low Limit function



LEDs to display OK / NOT OK Tests

▼ Lower than lower limit
● Lights if the STOP value is reached
▲ Higher than highest limit

A lower and an upper limit value can be defined. The instrument compares the individual measuring results with the preset limit values and shows the OK or NOT OK result by green or red light diode and by an acoustic sound.
To set these limit values, please see the SET Menu in section „Operation keys“.

Simple Measurement (Track Mode)

Displays (1) the actual operating force and force direction (7) (arrow)

To zero the display, press: 

Peak-Hold Funktion (Peak Mode)

To change, please press: 

Auto-Peak-Hold-Mode (Auto-Peak Mode)

To change, please press: 

Minimum peak limit function to activate storage of measurements

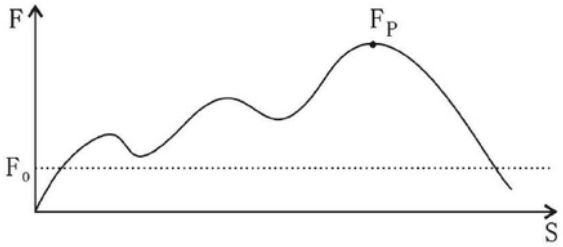

This function allows to eliminate unwanted „Pre-Peak values“ which are lower than the main peak value (Fp). The pre-setted limit value (Fo) takes care, that those “Pre-Peak values” are not saved.
The „Min. peak limit value “ function is only possible in Peak-Mode.
To set this Min. limit value, please see the SET Menu in section „Operation keys“.

Storage of Peak limit values and Average value calculation
(out of up to 10 measurement values)

Saving Peak values in the instrument

⇨ Activation of „AUTO PEAK Function“ by PEAK button

⇨ Deactivation of „Average Function“ by MEMORY button

⇨ Now, all peak values are stored automatically in the instrument’s memory

⇨ To browse through the stored values, please use the ▲ or ▼ keys.
(The values will be shown in the upper display segment)

⇨ By pressing the MEMORY key, the average value of the stored peak values can be displayed (to be seen in the upper display segment)

⇨ To delete every stored value, press the▼-key in the AVERAGE-Mode

7 Configuration of RS 232 interface

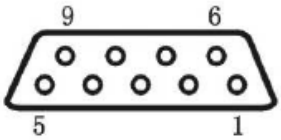

SUB-D 9pm

Pin	Signal	Illustration
2	TxD	Output signal
3	RxD	Input signal
5	GND	Ground
6	+1.6 to + 2 V	>upper limit value
7	+1.6 to + 2 V	< lower limit value
8	+1.6 to + 2 V	OK

7.1 Output Protocol

RS-232 Parameter

- Baudrate: 9600
- Data-Bit: 8
- Parity: none
- Stop-bit: 1

The measured value is requested by the PC by the ASCII Sign “9”.

The measured value that comes from the instrument has this format:

e.g. 0011.70 means -11.70 Newton, if Newton is the selected unit

||-----|

| |____> the other 6 places define the measured value as ASCII-Signs

|_____> the first place describes the direction of the force (0 = minus = Pressure;
1 = plus = Tension)

or: 1021.15 means +21,15 N (in tension direction)

|_____> the first place describes the direction of the force (0 = minus = Pressure;
1 = plus = Tension)

or: 1021.15 means +21,15 N (in tension direction)

8 Warnings

Irregular performed force measurements can lead to serious injuries of persons and damages of objects. Out of this reason, they may only be conducted by trained and experienced staff.
It has to be avoided, that forces, which are acting on the force gauge, are exceeding the instrument's max. load (Max) or forces, which are not acting axially from the external load cell to the instrument; or, if high impulse forces are acting on the measuring instrument.
Please avoid any twisting of the load cell. This might lead to a breakage and, in any case, measurement accuracy will decrease.

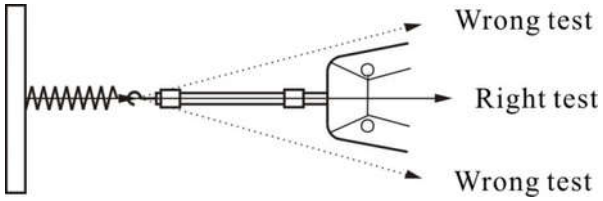

Inappropriate use

Do not use the instrument for medical measurements. In the case, that small quantities are removed or added to the material to be measured, incorrect measuring results can be displayed due to the "stability compensation" in the instrument. (Example: liquid, slow draining off from a container suspended at the instrument).
Do not leave hanging a continuous load.

Overload

Be sure to prevent overloading the instrument beyond the stated maximum load (max.), minus any tare weight that may possibly exist. This could damage the instrument (risk of breakage).

Attention:

- Always make sure that there are no people or materials below the load that could be injured or damaged!
- The instrument is not suitable for measuring people. Do not use it as baby scale!
- The instrument does not comply with the medical product law (MPG).

Never operate the instrument in hazardous locations. The series design is not explosion-proof.

- Structural alterations may not be made to the instrument. This can lead to incorrect measuring results, faults concerning safety regulations as well as to destruction of the instrument.
-The instrument may only be operated and maintained by trained staff.
- The instrument may only be used in compliance with the described guidelines.
- Varying ranges of application/ planned use must be approved by SAUTER in writing.

Guarantee

The guarantee is not valid in following cases:

• Non-observation of our guidelines in the operating instructions

• Use outside the described applications

• Alteration to or opening of the device

• Mechanical damage and damage caused by any kinds of media, e.g. liquids entering the housing

• Natural wear and tear

• Inappropriate assembly or electric installation

• Overloading of the load cell

Monitoring the test substances

The metrology features of the instrument and any possible available adjusting weight must be checked at regular intervals within the scope of quality assurance.
For this purpose, the answerable user must define a suitable interval as well as the nature and scope of this check. Information is available on the home page (www.KERN-sohn.com) with regard to the monitoring of instrument test substances and the test weights required for this. Test weights and instruments can be adjusted quickly and at a reasonable price in KERN's accredited DAkkS calibration laboratory (return to national normal).

Important

Please note the leads of the instruction manual: Please read all instructions carefully before first use of the instrument, even if you are already experienced with our SAUTER equipment.

Annotation:
To have a look at the CE Declaration of Conformity, please click onto the following link: https://www.kern-sohn.com/shop/de/DOWNLOADS/

9 Adjustment Procedure FH

1. Switch on the instrument	Press ON/OFF button	The green light will be on
2. Enter the adjustment procedure	Directly after pressing ON/OFF, press PEAK and PRINT together for more times and **very short intervals** until the red light is on.	The lower red light will be on
3. Instrument type	Press SET immediately, as soon as the red light turns off	The max. Newton value of the instrument will be displayed, can be adjusted now respectively
3a) *(Back to the normal mode ???)*	*(If you are in the operation mode again, the instrument has to be shut off. Start again with 1. Eventually pressing the buttons faster)*	
4. Select instrument type	Please select the max. charge (N) of the instrument with the buttons▼▲	The corresponding value to the instrument appears in the display
5. Save the settings	Press SET	
6. Enter the adjustment sequence	Press MEMORY	The red light on the right side lights up
7. Choose the adjustment weight	Press UNIT and with▼▲ specify the calibration weight in Newton (X kg * 9,81)	The weight is written in the display
8. Save the adjustment weight	Press SET and UNIT simultaneously	
9. Attach the weight to the instrument	Attach the weight to the instrument and hold steady, then press ZERO	The instrument changes to operation mode. Adjustment procedure is finished