MURR ELEKTRONIK
stay connected

IMPACT67 COMPACT MODULE, PLASTIC

Profinet, 8 dig. In + 8 dig. Out

Digital inputs/outputs
DI8 DO8 - 2 A
Ethernet 10/100 Mbit/s; M12, D-coded
7/8", 5-pole, 2× max. 9 A
M12, 5-pole, A-coded
Connection cables are in the online shop under "Connection Technology".
Housing fully potted.

Link to Product

Illustration





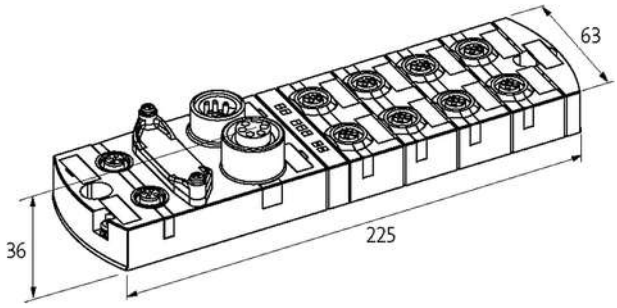

Product may differ from Image

General data	
Mounting method	2-hole screw mounting, compatible with I/O modules of MVK model range
Temperature range	-25...+55 °C (storage temperature -25...+70 °C)
Protection	IP67
Dimensions H×W×D	39×63×225 mm
Output	
Switching current per output	max. 2 A (short-circuit and overload protected)
Input	
Sensor supply US	24 V DC (EN 61131-2), max. 200 mA (M12 female), short-circuit and overload protected
Type	for 3-wire sensors or mechanical switches, PNP
Connections	
Fieldbus	Ethernet 10/100 Mbit/s; M12, D-coded
Sensor-system/actuator supply	7/8", 5-pole, 2× max. 9 A

The information in this brochure has been compiled with the utmost care.
Liability for the correctness completeness and topicality of the information is restricted to gross negligence. Version: 01/22

I/O ports	M12, 5-pole, A-coded
PROFINET	
Addressing	DCP
Diagnostic	
Communication status	via LED
Diagnostic via LED	per module and channel
Diagnostic via BUS	per module and channel
Monitoring - under voltage	yes
Monitoring - no voltage	yes
Commercial data	
country of origin	DE
customs tariff number	85389099
EAN	4048879051903
eClass	27242604
Packaging unit	1.000

The information in this brochure has been compiled with the utmost care.
Liability for the correctness completeness and topicality of the information is restricted to gross negligence. Version: 01/22