HENGSTLER

TECHNICAL DATASHEET

Incremental Stainless Steel Encoders RI 59

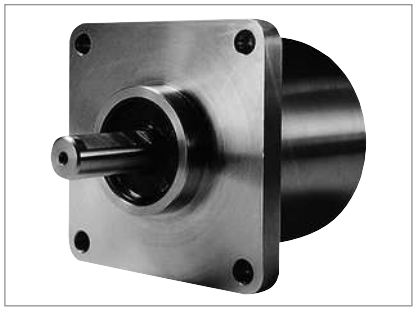

- Stainless steel encoder with high protection class
- High corrosion resistance
- Use in the area of food production
- Applications: packing machines, bottling machines, washing plants, mixers, cranes, hoists, marine outfitters

CE c UL us LISTED RoHS 2002/95/EC

NUMBER OF PULSES

1 / 2 / 3 / 4 / 5 / 10 / 15 / 20 / 25 / 30 / 35 / 40 / 45 / 50 / 60 / 64 / 70 / 72 / 80 / **100** / 125 / 128 / 144 / 150 / 180 / 200 / 230 / **250** / 256 / 300 / 314 / 350 / 360 / 375 / 400 / 460 / 480 / **500** / 512 / 600 / 625 / 635 /720 / 900 / **1000** / **1024** / 1200 / **1250** / 1500 / 1600 / 1800 / 2000 / 2048 / **2500** / 3000 / 3480 / **3600** / 3750 / 3968 / 4000 / **4096** / 4800 / **5000** / 5400 / 6000 / 7200 / 7680 / 8000 / 8192 / 9000 / 10000
Other number of pulses on request
Preferably available versions are printed in bold type.

TECHNICAL DATA
mechanical

Housing diameter	58 mm
Shaft diameter	9.52 mm / 10 mm (Solid shaft)
Flange (Mounting of housing)	Square flange 63.5 mm
Protection class shaft input (EN 60529)	IP67
Protection class housing (EN 60529)	IP67
Shaft load axial / radial	40 N / 60 N
Max. speed	max. 10 000 rpm
Torque	≤ 1 Ncm
Moment of inertia	approx. 20 gcm²
Vibration resistance (DIN EN 60068-2-6)	100 m/s² (10 ... 2000 Hz)
Shock resistance (DIN EN 60068-2-27)	1000 m/s² (6 ms)
Operating temperature	-10 °C ... +70 °C
Storage temperature	-25 °C ... +85 °C
Material housing	Stainless Steel
Weight	approx. 620 g
Connection	Cable, axial or radial

TECHNICAL DATA
electrical

General design	as per DIN VDE 0160, protection class III, contamination level 2, overvoltage class II
Supply voltage [1]	RS422 + Sense (T): DC 5 V ±10 % RS422 + Alarm (R): ± 10% DC 5 V or DC 10 - 30 V Push-pull (K), Push-pull antivalent (I): DC 10-30 V
Max. current w/o load	40 mA (DC 5 V), 60 mA (DC 10 V), 30 mA (DC 24 V)
Max. pulse frequency	RS422: 300 kHz Push-pull: 200 kHz

TECHNICAL DATASHEET

Incremental Stainless Steel Encoders RI 59

TECHNICAL DATA
electrical (continued)

Standard output versions	RS422 + Alarm (R): A, B, N, $\overline{A}$, $\overline{B}$, $\overline{N}$, $\overline{Alarm}$ RS422 + Sense (T): A, B, N, $\overline{A}$, $\overline{B}$, $\overline{N}$, Sense Push-pull (K): A, B, N, $\overline{Alarm}$ Push-pull complementary (I): A, B, N, $\overline{A}$, $\overline{B}$, $\overline{N}$, $\overline{Alarm}$
Pulse width error	± max. 25° electrical
Number of pulses	1 ... 10 000
Alarm output	NPN-O.C., max. 5 mA
Pulse shape	Square wave
Pulse duty factor	1:1

[1] Pole protection with supply voltage DC 10 - 30 V

ELECTRICAL CONNECTIONS
Cable PVC

Connecting cable Colour	**Lead ∅**	**Output RS422 T and R**	**push-pull K and I**
red	0.5 mm [2]	DC 5/10 - 30 V	DC 10 - 30 V
red/yellow	0.14 mm [2]	Sense V_{CC}	Sense V_{CC}
white	0.14 mm [2]	Channel A	Channel A
white/brown	0.14 mm [2]	Channel $\overline{A}$	Channel $\overline{A}$ [1]
green	0.14 mm [2]	Channel B	Channel B
green/brown	0.14 mm [2]	Channel $\overline{B}$	Channel $\overline{B}$ [1]
yellow	0.14 mm [2]	Channel N	Channel N
yellow/brown	0.14 mm [2]	Channel $\overline{N}$	Channel $\overline{N}$ [1]
black	0.5 mm [2]	GND	GND
black/yellow	0.14 mm [2]	$\overline{Alarm}$/Sense GND [2]	$\overline{Alarm}$
screen [3]		screen [3]	screen [3]

[1] only push-pull complementary (I)

[2] depending on ordering code

[3] connected with encoder housing

TECHNICAL DATASHEET

Incremental Stainless Steel Encoders RI 59

DIMENSIONED DRAWINGS

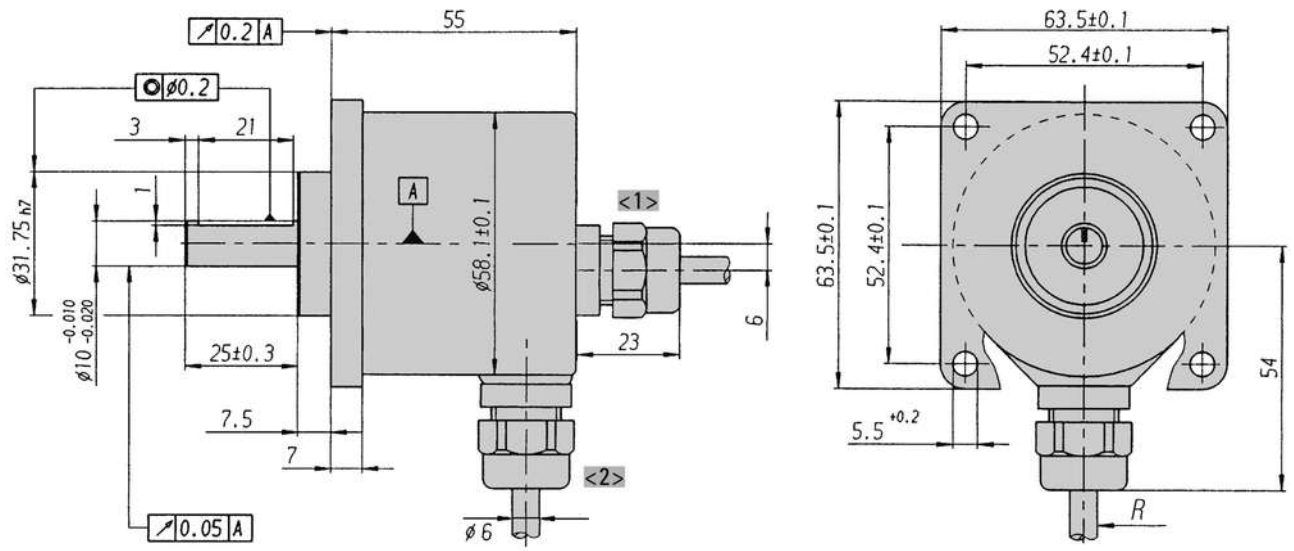

<1> axial
<2> radial

Cable bending radius R for flexible installation ≥ 100 mm
Cable bending radius R for fixed installation ≥ 40 mm Dimensions in mm

ORDERING INFORMATION

Type	Number of pulses	Supply voltage	Flange, Protection, Shaft	Output [1]	Connection
RI59-O	**1 ... 10000**	**A** DC 5 V **E** DC 10 - 30 V	**Q.76** Square, IP67, 9.52 mm **Q.72** Square, IP67, 10 mm **Q.7B** Square 63.5x63.5, IP67, 9.52 x 25 mm **Q.7A** Square 63.5x63.5, IP67, 10 x 25 mm	**R** RS422 +Alarm **T** RS422 +Sense **K** Push-pull **I** Push-pull complementary	**A** PVC cable, axial **B** PVC cable, radial

[1] Output code "K" and "I": short-circuit-proof

ORDERING INFORMATION
Selection of cable length

Versions with cable outlet (connection A, B, E or F) are available with various lengths of cable. To order your desired cable length, please add the respective code to the end of your ordering code. Further cable lengths on request.

Code	Cable length
without code	1.5 m
-D0	3 m
-F0	5 m
-K0	10 m
-P0	15 m
-U0	20 m
-V0	25 m

TECHNICAL DATASHEET

Incremental Stainless Steel Encoders RI 59 Accessories

FLEXIBLE COUPLINGS



Bellows coupling



Helical coupling



Isolated disk coupling

		Ordering code
Bellows coupling	10 mm / 10 mm	3 520 037
Bellows coupling	8 mm / 10 mm	3 520 077
Helical coupling 25/32	6 mm / 9.53 mm	3 520 052
Helical coupling 25/32	6 mm / 10 mm	3 520 066
Helical coupling 25/32	6.35 mm / 9.52 mm	3 520 062
Helical coupling 25/32	10 mm / 12 mm	3 520 065
Helical coupling 25/32	10 mm / 10 mm	3 520 074
Isolated disk coupling	6 mm / 10 mm	3 520 082
Isolated disk coupling	6 mm / 9.53 mm	3 520 084
Isolated disk coupling	6.35 mm / 6.35 mm	3 520 085
Isolated disk coupling	10 mm / 10 mm	3 520 088

CONNECTING CABLES

Cable not made up with connectors	Ordering code
PVC cable, 10-core + screen	3 280 114 + length
PVC cable, 6-core + screen	3 280 113 + length

MEASURING WHEELS

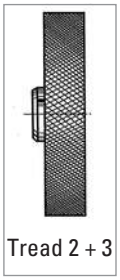

Tread 2 + 3

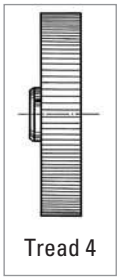

Tread 4

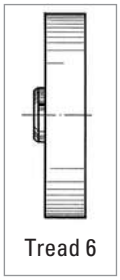

Tread 6

Tread 2 B
with glued-on rubber profile B = low-wear rubber surface with good grip (white)
Applications such as paper and cardboard, measuring cables, nongreasy metals, fleece, undressed or surface-treated wood, soft and hard plastics

Tread 3
vulcanized rubber surface with parallel knurl
Applications such as rubber, leather, fabrics, flooring and glass

Tread 4
Aluminum with parallel knurl
Applications such as rubber, soft plastics, wood with rough surface, and to a limited extent for fabrics

Tread 6
plastic surface
Applications such as wire, greasy metals and steel sections

Material	Bore diameter (mm) fitting to encoder shaft	Circumference	Tread	Width of bearing surface	Ordering code
Aluminum	10 mm	0.2 m	2 B	12 mm	0 601 049
Aluminum	10 mm	0.5 m	2 B	25 mm	0 601 151
Aluminum	10 mm	0.5 m	3	25 mm	0 601 156

TECHNICAL DATASHEET

Incremental Stainless Steel Encoders RI 59 Accessories

MEASURING WHEELS (continued)

Material	Bore diameter (mm) fitting to encoder shaft	Circumference	Tread	Width of bearing surface	**Ordering code**
Aluminum	10 mm	0.5 m	6	25 mm	0 601 163
Aluminum	10 mm	0.5 yd	4	25 mm	0 601 157