E21271

Angle bracket

O6 STANDARD BRACKET

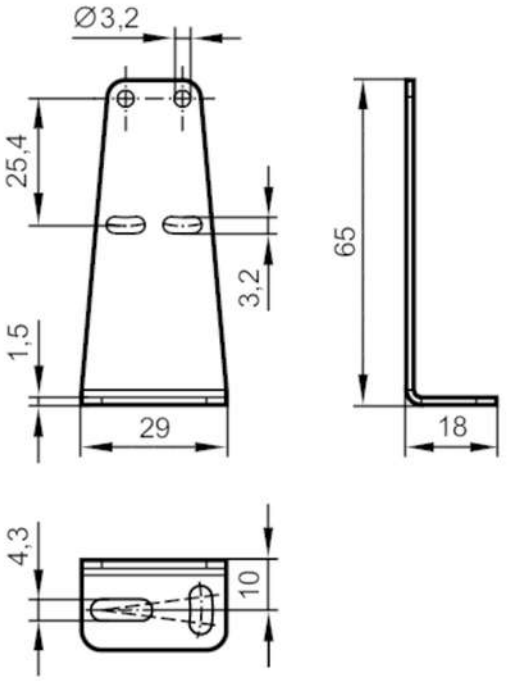

Application		
Design		for type O6
Mechanical data		
Weight	[g]	27.2
Dimensions	[mm]	65 x 18 x 29
Materials		stainless steel (1.4571/316Ti)
Accessories		
Items supplied		cylinder screws: 2 x M3 x 14
		washers: 2
Remarks		
Pack quantity		1 pcs.