Double-Pole Rocker Switch

WR Series



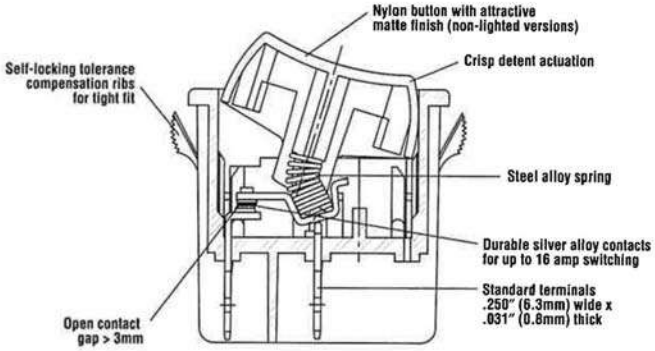

Features

- Rugged design for 2-pole high current designs
- Lighted and non-lighted
- Maintained action and momentary
- Single pole and double pole

Electrical Ratings				
			Electrical Life at Rated Load	
Switch Series	**EN61058 Rating**	**UL1054 Rating**	**According to VDE** (Min. Operations)	**According to UL** (Min. Operations)
WRG	16(4)A 250V~T125/55	16A 125/250 VAC 1/4HP 3/4HP 250VAC	10,000	6,000

Electrical Specifications		Material Specifications	
Ratings (WRG) :	16A 125/250 VAC 1/4HP 3/4HP 250VAC (cULus) 16(4)A 250V~T125/55 (VDE)	**Actuator (non-lighted): (lighted):**	Nylon 66 94V-2 Polycarbonate
		Base:	Nylon 66 94V-2
Dielectric Strength:	1000VAC for 1 minute	**Spring:**	Steel Wire
Insulation Resistance:	100M ohms min at 500VDC	**Contacts:**	Silver Alloy
Initial Contact Resistance:	0.020 ohms max	**Movable Arm:**	Silver-Plated Copper Alloy
Temperature Range:	0°C to + 65°C (UL)	**Terminals:**	Tin-Plated Copper Alloy

RoHS Compliant
UL File No: E23301

Specifications subject to change without notice.

Double-Pole Rocker Switch

WR Series

Dimensions inches (mm)

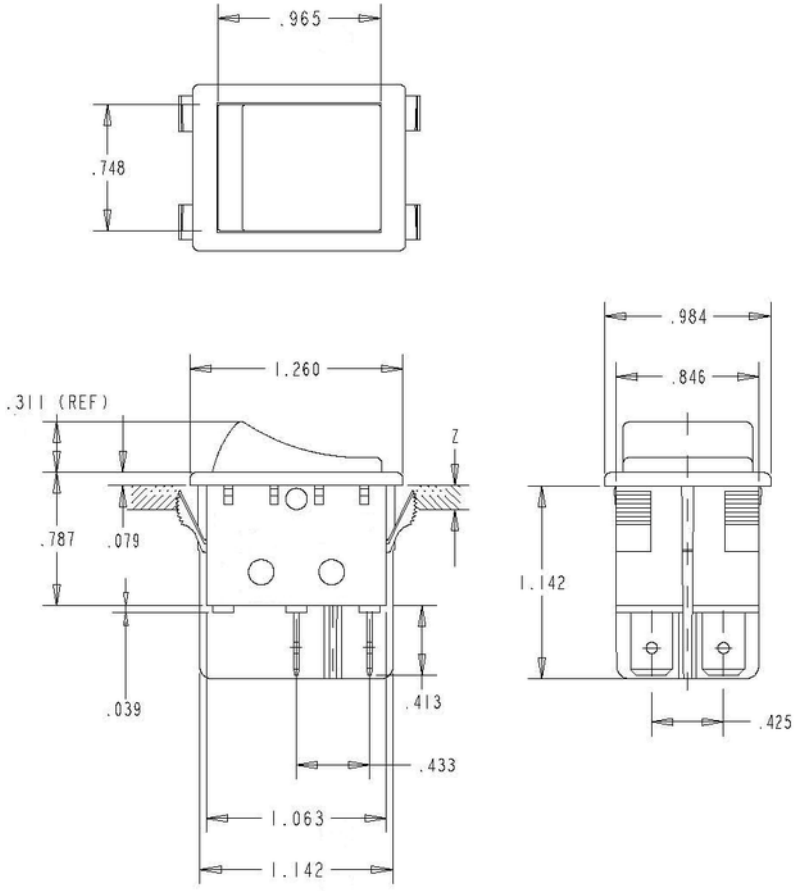

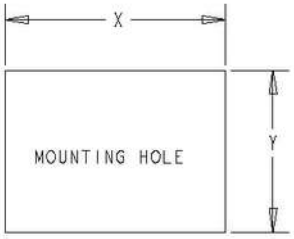

Z = PANEL THICKNESS

DIM. Z	DIM. X	DIM. Y
.030 TO .049	1.18	.867
.049 TO .079	1.19	.867
.079 TO .118	1.20	.867

Examples of Common Part Numbers and Descriptions inches (mm)

Part Number	Circuitry	Switch Function	Terminal Type	Actuator/ Housing Color	Legend Marking
WRG32F2FBBNN		On – Off	0.250 (6.3) Quick-Connect	Black/Black	
WRG32F2BBRLN		On – Off/Lighted	0.250 (6.3) Quick-Connect	Red/Black	

Boot #0015-0646

Ordering Information

WR G 3 2 F 2 F B B N N

Series
WR

Code	Circuitry
2	Single Pole
3	Double Pole

Code	Contact Rating
G	16A 125/250 VAC 1/4HP 3/4HP 250VAC cULus 16(4)A 250V~T125 VDE

Note: 10(2)A 250V~ 50E3 T125 special order

Code	Switch Function
2	On - Off
3	On - On
5	(On) - Off
6	(On) - On

Code	Terminal type inches (mm)
A	0.189" (4.8) QC
F	0.250" (6.3) QC

Code	Actuator Type
2	Curve
5	Flat Actuator

Code	Actuator Marking		
B	Blank		
C	O	Lo	Hi
D	O	Off	On
E	O	O	I
F	O	O	-

Code	Housing Color
B	Black
W	White
Y	Grey

Code	Actuator Color
A	Amber
B	Black
G	Green
R	Red
W	White
Y	Grey

Code	Lighted
N	Non-Lighted
L	Lighted (Bulb 125VAC)
E	Lighted (Bulb 250VAC)
F	Lighed 5VDC Incandescent
G	Lighted 6VDC Incandescent
H	Lighted 12VDC Incandescent

Code	Splashproof
N	No Rocker Boot

Rocker boot sold separately P/N: 0015-0646

Contact

Call, fax or visit our Website for more information.

ZF Electronics Corporation
11200 88th Avenue
Pleasant Prairie, WI 53158

Phone: 262.942.6500
Web: www.cherrycorp.com
Email: cep_sales@zf.com
Fax: 262.942.6566

The manufacturer accepts no liability for errors or non-availability, and reserves the right to change specifications without prior notice.

Technical data relates to product specifications only. Features may differ from those described. Only drawings combined with product specifications shall be deemed binding.

© 2007 ZF Electronics Corporation

Last Updated: 10/01/12