RAFIX 16, keylock switch, round collar, 2 x 90°, latching, key removal position 0+1+2

DISCONTINUED



fields of application

- Measurement-control-regulation
- Electrical engineering
- Mechanical and system engineering
- Industrial robots

special features

- Key switch in various rotation angle variants and key trigger positions
- Robust - also suitable for operation with gloves
- Close mounting of actuators possible, as wiring is axial from the rear
- Degree of protection: IP 65 at the front
- Mounting diameter 16.2 mm
- Separate switching elements UNIVERSAL required
- Switching elements with silver contacts (max. 250 V / 6 A) or gold contacts (max. 35 V / 0.25 A)
- Connection types switching elements: screw connection, plug-in connection, PCB plug-in socket
- The switching elements are snapped on and can be removed again by turning.

description

The locking systems we use were created according to the DIN EN 1303 standard by well-known lock manufacturers. They are open, mechanical systems which, depending on the environmental conditions, require occasional maintenance (e.g. greasing & oiling) by the machine or system operator.

RAFIX control units are modular units consisting of several parts. In the RAFIX 16 product family, these always consist of an actuating element and a switching element. Actuating elements (such as key switches) have the specified tactility, reset and function only when assembled with the appropriate switching elements.

With RAFIX 16 actuating elements, you can choose between three collar shapes: round, square or square side-by-side, in which the pushbuttons can be lined up seamlessly. The mounting diameter is 16.2 mm according to the standard. The anti-rotation lug can be easily removed with a screwdriver if necessary.

The information in this data sheet only contains general descriptions and / or performance features, which may not apply precisely as described to the respective application, and which my change due to further product enhancements. The technical data, illustrations and other information about our products are the mere results of individual technical testing. These descriptions and other product features are only binding if they expressly agreed upon at the time of the conclusion of a binding contract. In all other cases, we reserve the right to make technical changes as well as changes of availability. Pictures and other graphic illustrations are approximations only. All product names may be trademarks or brand names of the RAFI Group or any other sub-supplier of RAFI. The use of such by any third parties for their own purposes may infringe the rights of the respective entity holding those rights.

RAFI GmbH & Co. KG

Ravensburger Str. 128-134
88276 Berg / Ravensburg
Germany
www.rafi-group.com,
info.headquarters@rafi-group.com

technical data

general

Scope of delivery	2 keys
Collar shape	round
Operating temperature, min.	-25 °C
Operating temperature, max.	70 °C
Storage temperature, min.	-40 °C
Storage temperature, max.	85 °C
illuminated	No
Packaging	Box
Packaging unit	2 pcs.
net weight	15.3 g
Operating life	65,000 cycles
Degree of protection, front side, according to DIN EN 60529	IP65
Environment resistance	IEC 60068-2-14 IEC 60068-2-30 IEC 60068-2-33 IEC 60068-2-78
Protection class	II
MOQ order	10 pcs.
RoHS compliant	Yes
REACH compliant	Yes

mounting diameters

Outside dimension, length	24.95 mm
Outside dimension, width	24.95 mm
Outside dimension, height	47.15 mm
Mounting hole	16.2 mm
Mounting depth	44.7 mm
Installation height	27.95 mm
Grid, min.	25 x 25 mm
Collar dimension	ø 24,95 mm

mechanical data

Actuation function	latching
Operating torque, max.	1.3 Nm
Locking position	1
Number of locking positions	500
Key removal position	0+1+2
Rotating angle	2 x 90°
Fixing	Threaded ring
Threaded ring torque, max.	1.2 Nm

direct links

RAFI eCatalog

The information in this data sheet only contains general descriptions and / or performance features, which may not apply precisely as described to the respective application, and which my change due to further product enhancements. The technical data, illustrations and other information about our products are the mere results of individual technical testing. These descriptions and other product features are only binding if they expressly agreed upon at the time of the conclusion of a binding contract. In all other cases, we reserve the right to make technical changes as well as changes of availability. Pictures and other graphic illustrations are approximations only. All product names may be trademarks or brand names of the RAFI Group or any other sub-supplier of RAFI. The use of such by any third parties for their own purposes may infringe the rights of the respective entity holding those rights.

RAFI GmbH & Co. KG

Ravensburger Str. 128-134
88276 Berg / Ravensburg
Germany
www.rafi-group.com,
info.headquarters@rafi-group.com

drawings

Dimensioned drawing

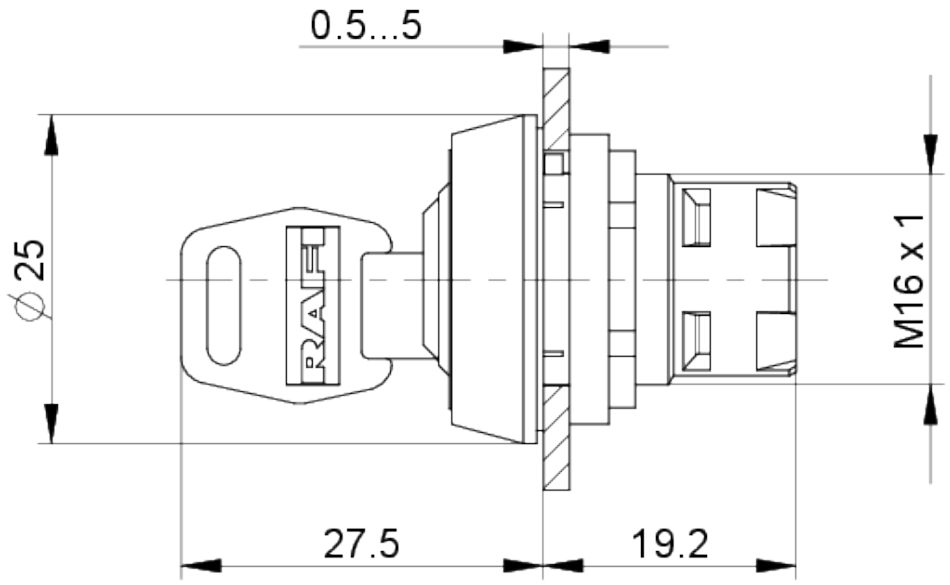

Mounting hole drawing

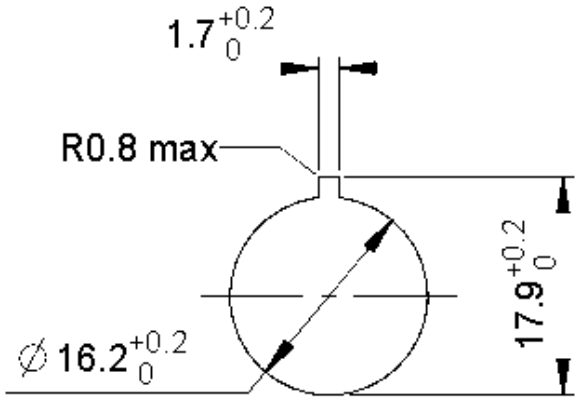

The information in this data sheet only contains general descriptions and / or performance features, which may not apply precisely as described to the respective application, and which my change due to further product enhancements. The technical data, illustrations and other information about our products are the mere results of individual technical testing. These descriptions and other product features are only binding if they expressly agreed upon at the time of the conclusion of a binding contract. In all other cases, we reserve the right to make technical changes as well as changes of availability. Pictures and other graphic illustrations are approximations only. All product names may be trademarks or brand names of the RAFI Group or any other sub-supplier of RAFI. The use of such by any third parties for their own purposes may infringe the rights of the respective entity holding those rights.

RAFI GmbH & Co. KG

Ravensburger Str. 128-134
88276 Berg / Ravensburg
Germany
www.rafi-group.com,
info.headquarters@rafi-group.com