Earthing Nuts

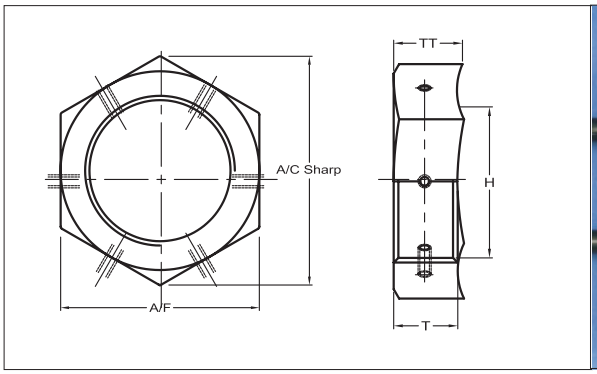

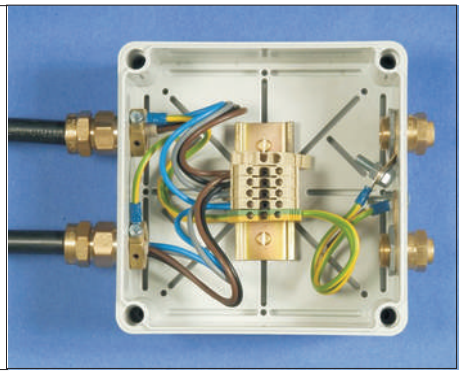

Material: Solid Brass construction,
for use with plastic and metal enclosures and with any metal cable gland..

Earth Nuts (P-Nuts) Speed up the installation of cable glands by replacing the Earth tag and lock nut to provide a high integrity earth connection. Comes supplied with Grub Screw & washer.

Type	WISKA No		Thread Size	Grub Screw Dimension	Grub Screw Hole Offset from Edge	Hexagonal Size Details A/F	A/C Sharp	Nut Thickness Details "T"	"TT"	Nut Wall
EN 20	EN 20	6	20 x 1.5	M4 x 6	4.0	27	31.0	8	8.8	3.5
EN 25	EN 25	4	25 x 1.5	M6 x 6	6.0	35	40.1	12	12.8	5.0
EN 32	EN 32	4	32 x 1.5	M8 x 8	6.0	45	51.6	18	19.0	6.5
EN 40	EN 40	2	40 x 1.5	M8 x 8	6.5	56	64.2	22	23.0	8.0
EN 50	EN 50	2	50 x 1.5	M8 x 8	7.5	66	75.5	28	29.2	8.0
EN 63	EN 63	1	63 x 1.5	M10 x 10	7.5	80	92.2	38	39.3	8.5

WISKA UK LTD
Unit 6F Bess Park Road, Trenant Industrial Estate, Wadebridge,Cornwall,PL27 6HB
T:01208 816 062 F:01208 816 708 E:info@wiska.co.uk