Photoelectric sensor

BOS 21M-PA-PK10-S4
BOS00TN

BALLUFF
sensors worldwide

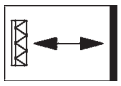

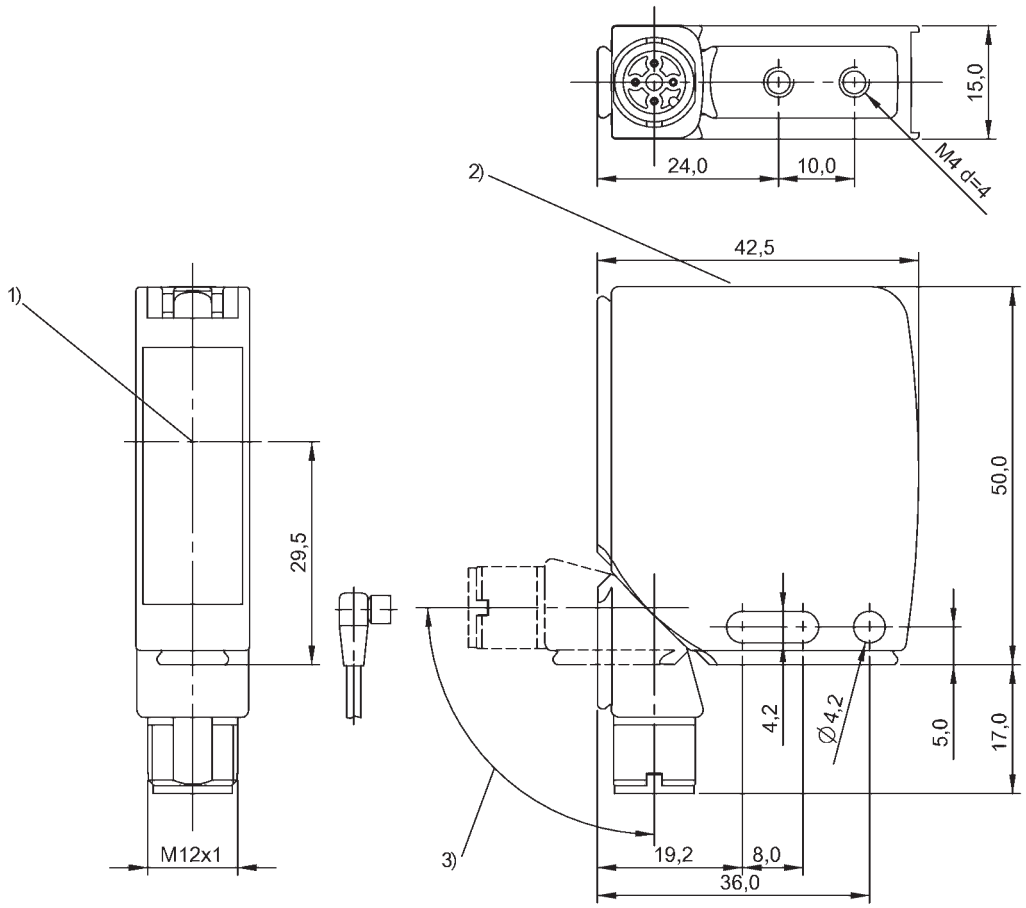

1) Optical axis 2) Display and control panel 3) 270° rotatable

- **Photoelectric sensor**
- **Series 21M**
- **LED, red light**
- **up to 5 m**

CE cULus LISTED IND. CONT. EQ. 81U2 for use in the secondary of a class 2 source of supply

General attributes

Adjuster	Potentiometer 270° (1x)
Approvals / Conformity	CE cULus
Basic standard	IEC 60947-5-2
Enclosure Type per IEC 60529	IP67
Indicator	Output function - LED YE Stability - LED GN
Polarity reversal protected	yes
Protection Class	II
Reference reflector	BOS R-1
Series	Series 21M
Setting	Sensitivity (Sn)
Short circuit protected	yes

Electrical attributes

Connection type	Connector
Eff. operating current Ie	100 mA
Eff. operating voltage Ue DC	24.0 V
Electrical version	DC, direct current
Load capacitance max. (at Ue)	1.00 µF
No-load current max. Io at Ue	35 mA
Operating voltage UB max. DC [V]	30.0 V
Operating voltage UB min. DC [V]	10.0 V
Rated insulation voltage Ui	75 V DC
Ripple max. (% of Ue)	8 %
Switching freq. f max. (at Ue)	1000 Hz
Switching function	NO-NC (pins 4-2)
Switching output	PNP (2x)
Turn on time ton max.	0.50 ms
Voltage drop Ud max. (at Ie)	2.0 V

Mechanical attributes

Ambient temperature Ta max.	55 °C
Ambient temperature Ta min.	-25 °C
Connector type	M12x1-S04
Eff. operating distance Sr	4000 mm
Housing material	GD-Zn, aluminum
Length 1	15.0 mm
Length 2	42.5 mm
Length 3	50.0 mm
Mounting type	Screw M4
Operating range Ro	0...4 m
Range Sn	Sn = 4 m, adjustable
Sensing face material	Glass
Style	Block, rotatable connection
Surface protection	Powder coated

Optical attributes

Light type	LED, red light
Optical special feature	Coaxial optics
Polarizing filter	yes
Principle of optical operation	Retro-reflective sensor
Switching function, optical	NO dark-on - NC light-on
Wavelength	650 nm

Additional text
Order accessories separately.
For additional information, refer to user's guide.
Polarizing filters prevent spurious switching due to reflecting and shiny parts.
Only for NFPA 79 applications (machines with a supply voltage of maximum 600 volts).
Device shall be connected only by using any R/C (CYJV2) cord, having suitable ratings.
The sensor is functional again after the overload has been eliminated.
Operating object (test target): Gray card, 200 x 200, 90 % remission, lateral approach,

direction of movement vertical to plane of lens axes.

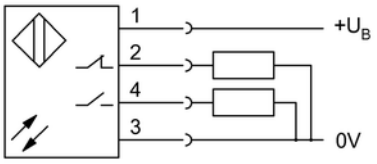

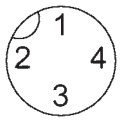

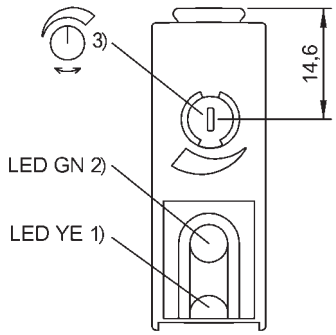

1) Output function 2) Stability 3) Sensitivity