BCS M18B4I3-PSC80D-S04K
Ordering code: BCS00MF

Capacitive sensor
M18
Global

Connector, M12x1-S04
Working range 1...8 mm
Output signal PNP, Normally open (NO)
Flush (shielded)

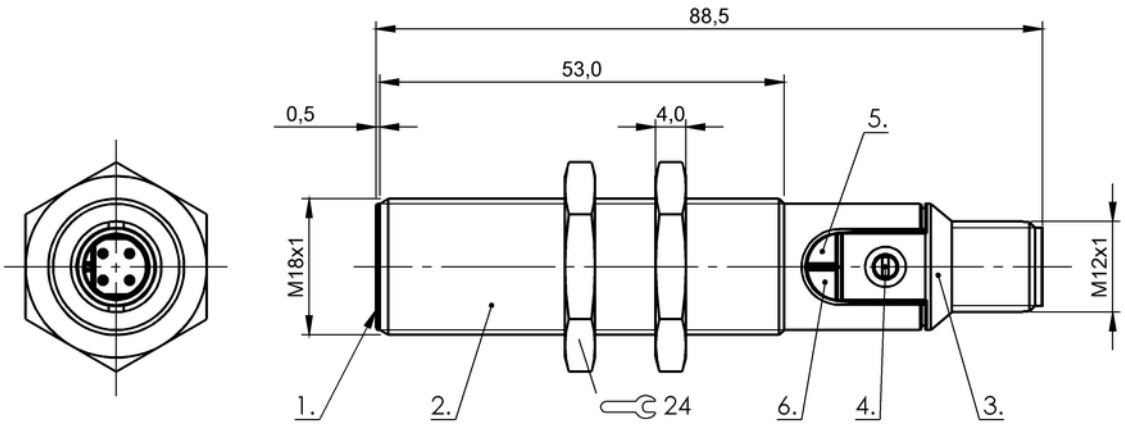

1) Active surface, 2) Housing, 3) Top cover, 4) Pot, 5) LED Power, 6) LED function indicator

Characteristic data

Trade name / Technology	Global
Power indicator	Yes
Function indicator	Yes
Short-circuit protected	Yes
Protected against polarity reversal	Yes
Protected against miswiring	No

Electrical data

Electrical version	DC, direct current
Operating voltage	10...30 V DC
Rated operating voltage Ue DC	24,0 V
Effective operating current Ie	100 mA
Rated insulation voltage Ui	75 V DC
No-load current Io damped max.	18 mA
Max. no-load cur. Io undamped	15 mA
Ready delay tv max.	300 ms
Voltage drop static max.	1,5 V
Ripple max. (% of Ue)	10
Switching freq. f max.	100 Hz
Hysteresis H max. (in % of Sr)	15 %

Mechanical data

Rated operating distance Sn	8 mm
Temp. drift max. (% of Sr)	20 [-5..+55 °C]
Ambient temperature	-25...85 °C
Housing material	1.4305
Sensing surface material	PBT
Cover material	PBT / PA
Repeat accur. R max. (% of Sr)	2 %
Tightening torque	60 Nm

Basic data

Enclosure Type per IEC 60529	IP67
Basic standard	IEC 60947-5-2
Utilisation category	DC 13

Remarks

Scope of delivery	
Additional features	Weld immune (Magnetic field 100kA/m)

IND. CONT. EQ. 81U2
for use in the secondary of
a class 2 source of supply



BCS M18B4I3-PSC80D-S04K
Ordering code: BCS00MF

BALLUFF
sensors worldwide

Capacitive sensor
M18
Global

Connector, M12x1-S04
Working range 1...8 mm
Output signal PNP, Normally open (NO)
Flush (shielded)

