BF11500E230

THREE-POLE CONTACTOR, IEC OPERATING CURRENT IE (AC3) = 115A, AC/DC COIL, 100...250VAC/DC



Product designation			Power contactor
Product type designation			BF115
Contact characteristics			
Number of poles		Nr.	3
Rated insulation voltage Ui IEC/EN		V	1000
Rated impulse withstand voltage Uimp		kV	8
Operational frequency			
	min	Hz	25
	max	Hz	400
IEC Conventional free air thermal current Ith		A	160
Operational current Ie			
	AC-1 (≤40°C)	A	160
	AC-1 (≤55°C)	A	130
	AC-1 (≤70°C)	A	115
	AC-3 (≤440V ≤55°C)	A	115
	AC-4 (400V)	A	54
Rated operational power AC-3 (T≤55°C)			
	230V	kW	37
	400V	kW	55
	415V	kW	55
	440V	kW	55
	500V	kW	75
	690V	kW	110
	1000V	kW	55
IEC max current Ie in DC1 with L/R ≤ 1ms with 1 poles in series			
	≤24V	A	160
	48V	A	160
	75V	A	120
	110V	A	10
	220V	A	–
IEC max current Ie in DC1 with L/R ≤ 1ms with 2 poles in series			
	≤24V	A	160
	48V	A	160
	75V	A	160
	110V	A	130
	220V	A	14
IEC max current Ie in DC1 with L/R ≤ 1ms with 3 poles in series			
	≤24V	A	160
	48V	A	160
	75V	A	160
	110V	A	140
	220V	A	145
IEC max current Ie in DC1 with L/R ≤ 1ms with 4 poles in series			
	≤24V	A	160
	48V	A	160

The characteristics described in this document are subject to updates or modifications at any time. The descriptions, technical and functional information, illustrations and instructions in this brochure are purely illustrative, and are consequently not contractually binding

	75V	A	160
	110V	A	160
	220V	A	160
IEC max current Ie in DC3-DC5 with L/R ≤ 15ms with 1 poles in series			
	≤24V	A	160
	48V	A	50
	75V	A	40
	110V	A	6
	220V	A	–
IEC max current Ie in DC3-DC5 with L/R ≤ 15ms with 2 poles in series			
	≤24V	A	160
	48V	A	72
	75V	A	65
	110V	A	65
	220V	A	7
IEC max current Ie in DC3-DC5 with L/R ≤ 15ms with 3 poles in series			
	≤24V	A	160
	48V	A	150
	75V	A	100
	110V	A	100
	220V	A	92
IEC max current Ie in DC3-DC5 with L/R ≤ 15ms with 4 poles in series			
	≤24V	A	160
	48V	A	120
	75V	A	120
	110V	A	125
	220V	A	115
Short-time allowable current for 10s (IEC/EN60947-1)		A	920
Protection fuse			
	gG (IEC)	A	200
	aM (IEC)	A	125
Making capacity (RMS value)		A	1500
Breaking capacity at voltage			
	440V	A	1200
	500V	A	850
	690V	A	905
Resistance per pole (average value)		mΩ	0.45
Power dissipation per pole (average value)			
	Ith	W	11.5
	AC3	W	6.0
Tightening torque for terminals			
	min	Nm	6
	max	Nm	7
	min	lbin	4.4
	max	lbin	5.2
Tightening torque for coil terminal			
	min	Nm	0.8
	max	Nm	1
	min	lbin	0.59
	max	lbin	0.74
Conductor section			
AWG/Kcmil			
	max		2/0

The characteristics described in this document are subject to updates or modifications at any time. The descriptions, technical and functional information, illustrations and instructions in this brochure are purely illustrative, and are consequently not contractually binding

Flexible w/o lug conductor section				
		min	mm²	1.5
		max	mm²	70
Flexible c/w lug conductor section				
		min	mm²	1.5
		max	mm²	70
Power terminal protection according to IEC/EN 60529				IP20 front
Mechanical features				
Operating position				
		normal		Vertical plan
		allowable		±30°
Fixing				Screw / DIN rail 35mm
Weight			g	2060
Conductor section				
AWG/kcmil conductor section				
		max		2/0
Operations				
Mechanical life			cycles	15000000
Electrical life			cycles	1200000
AC coil operating				
Rated AC voltage at 50/60Hz, 60Hz				
		min	V	100
		max	V	250
Rated AC voltage at 50/60Hz			V	230
AC operating voltage				
of 50/60Hz coil powered at 50Hz				
	pick-up			
		min	%Us	80
		max	%Us	110
	drop-out			
		max	%Us	≤70 Us min
of 50/60Hz coil powered at 60Hz				
	pick-up			
		min	%Us	80 Us min
		max	%Us	110 Us max
	drop-out			
		max	%Us	≤70 Us min
AC average coil consumption at 20°C				
of 50/60Hz coil powered at 50Hz				
		in-rush	VA	70…175
		holding	VA	1.7…3.5
of 50/60Hz coil powered at 60Hz				
		in-rush	VA	70…175
		holding	VA	1.7…3.5
of 60Hz coil powered at 60Hz				
		in-rush	VA	70…175
		holding	VA	1.7…3.5
Dissipation at holding ≤20°C 50Hz			W	1.3…1,5
DC coil operating				
DC rated control voltage				
		min	V	100
		max	V	250

The characteristics described in this document are subject to updates or modifications at any time. The descriptions, technical and functional information, illustrations and instructions in this brochure are purely illustrative, and are consequently not contractually binding

DC rated control voltage				V	230
DC operating voltage					
	pick-up				
			min	%Us	80 Us min
			max	%Us	110 Us max
	drop-out				
			max	%Us	≤70 Us min
Average coil consumption ≤20°C					
			in-rush	W	70…80
			holding	W	1.3…1.5
Max cycles frequency					
Mechanical operation				cycles/h	1500
Operating times					
Average time for Us control					
	in AC				
		Closing NO			
			min	ms	45
			max	ms	90
		Opening NO			
			min	ms	24
			max	ms	60
UL technical data					
Yielded mechanical performance					
	for three-phase AC motor				
			200/208V	HP	40
			220/230V	HP	40
			460/480V	HP	75
			575/600V	HP	100
General USE					
	Contactor				
			AC current	A	165
Short-circuit protection fuse, 600V					
	High fault				
			Short circuit current	kA	100
			Fuse rating	A	200
			Fuse class		J
	Standard fault				
			Short circuit current	kA	10
			Fuse rating	A	250
			Fuse class		RK5
Ambient conditions					
Temperature					
	Operating temperature				
			min	°C	-50
			max	°C	70
	Storage temperature				
			min	°C	-60
			max	°C	+80
Max altitude				m	3000
Dimensions					

The characteristics described in this document are subject to updates or modifications at any time. The descriptions, technical and functional information, illustrations and instructions in this brochure are purely illustrative, and are consequently not contractually binding

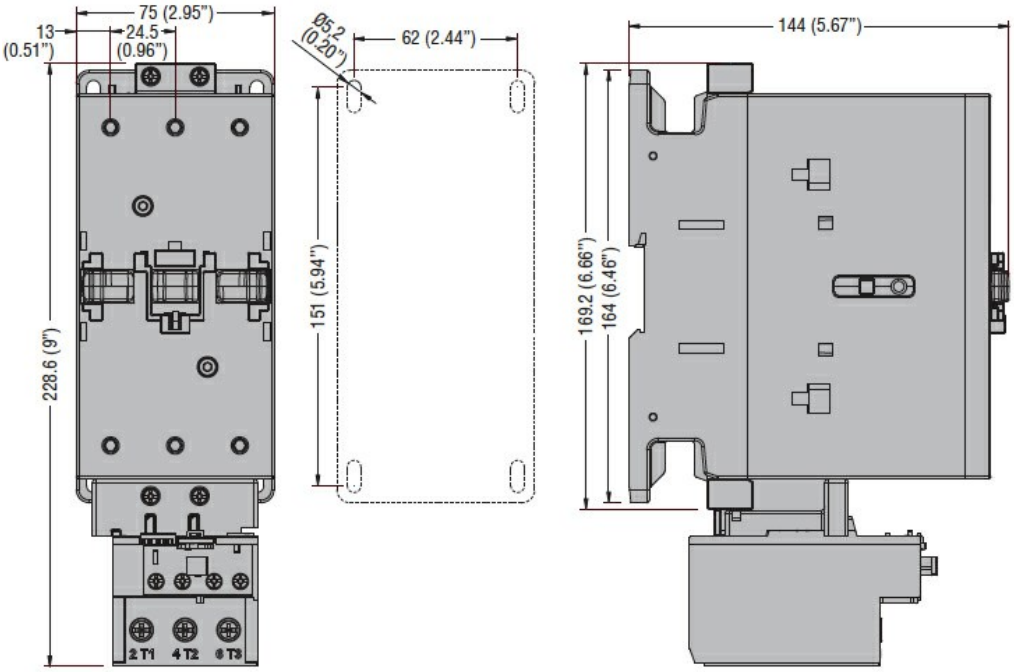

Wiring diagrams

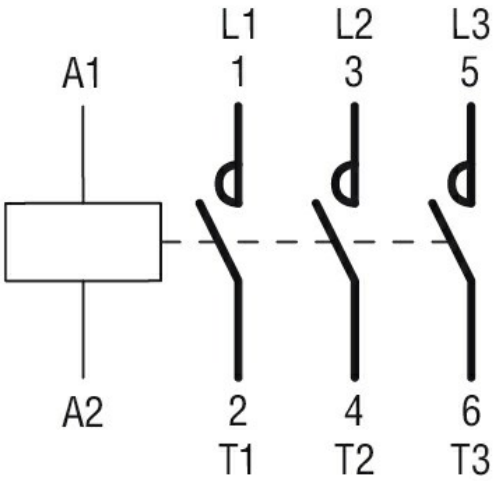

Certifications and compliance

Compliance

CSA C22.2 n° 60947-1
CSA C22.2 n° 60947-4-1
IEC/EN/BS 60947-1
IEC/EN/BS 60947-4-1
UL 60947-1
UL 60947-4-1

Certificates

CCC
cULus

ETIM classification

ETIM 8.0	EC000066 - Power contactor, AC switching

The characteristics described in this document are subject to updates or modifications at any time. The descriptions, technical and functional information, illustrations and instructions in this brochure are purely illustrative, and are consequently not contractually binding