
STAUFF

	Plastic Filler Breather	**24 - 31**
	SPB-1 / 2 / 3 (Threaded Version)	**24**
	SPB-4 / 5 (Flange Version)	**25**
	Accessories / Options Dipsticks / Baskets / Pressurisation	**26**
	Pressure Drop Flow Curves	**27**
	SPBN (Compact Design; Threaded Version)	**28**
	SPBN (Compact Design; Bayonet Version)	**28**
	Accessories / Options / Pressure Drop Flow Curves Dipsticks / Baskets / Pressurisation	**29**
	**Plastic Filler Breather Mini** SPBM (Threaded Version)	**30**
	SES (Threaded Version)	**31**
	SES (Welded Version)	**31**

	Metal Filler Breather	**32 - 37**
	SMBT-47 (Threaded Version)	**32**
	SMBB-47 (Bayonet Version)	**33**
	SMBT-80 (Threaded Version)	**34**
	SMBB-80 (Bayonet Version)	**35**
	SMBP-80 (Push-On Version)	**36**
	**Lockable Metal Filler Breather** SMBL (Clamping, Threaded and Push-On Version)	**37**
	Accessories / Options	**38 - 39**
	**Side Mount Bracket** ASMB-1 (Polyamide Version)	**38**
	**Side Mount Bracket** ASMB-2 (Aluminium Version)	**38**
	**Extended Bayonet Flange** EBF	**39**
	**Weld Riser** WR	**39**

B

Plastic Filler Breather
Types SPB-1 / 2 / 3
(Threaded Version)



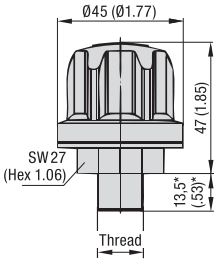

SPB-1

* for thread Type N12: 16,0 (.63)

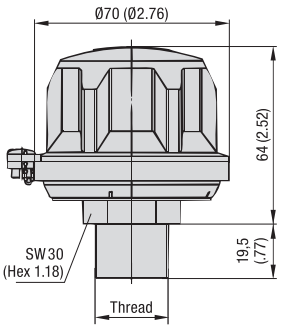

SPB-2

(See page 28 for compact version SPBN)

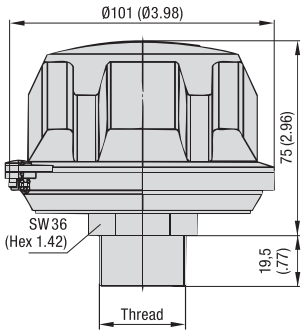

SPB-3

Characteristics

Designed to be used as filler ports for hydraulic reservoirs, allowing the reservoir to breathe whilst protecting it from contamination found in harsh environments

Features
- Available with 3 different cap diameters
- Threaded version, equipped with male BSP thread (ISO 228) or male NPT thread (ANSI B1.20.1)
- Operating temperature range: -40 °C ... +120 °C / -40 °F ... +248 °F

Materials
- Made of non-corrosive materials
- Body and cap made of glass-fibre reinforced Polyamide (PA)
- Seals made of NBR (Buna-N®)

Contact STAUFF for alternative materials.

Accessories / Options
- Pressurisation up to 0,7 bar / 10 PSI (not available for SPB-1)
- Air filter element
- Anti-splash feature
- Plastic dipstick with integrated anti-splash feature
- Plastic dipstick with integrated magnet
- Oil Demister (not available for SPB-1)

Please see pages 26 and 53 for details.

Maximum Air Flow Rate
- 0,15 m^3/min / 5.30 cfm for SPB-1
- 0,40 m^3/min / 14.13 cfm for SPB-2
- 1,00 m^3/min / 35.31 cfm for SPB-3

Please see page 27 for detailed air flow curves.

Installation
- Recommended mounting spaces: Ø48 mm / Ø1.89 in for SPB-1, Ø90 mm / Ø3.54 in for SPB-2, and Ø122 mm / Ø4.80 in for SPB-3

Thread Options

Thread		SPB-1	SPB-2	SPB-3	Code
Male BSP Thread (ISO 228)	G1/4	●	○	○	B04
	G3/8	●	●	○	B06
	G1/2	●	●	●	B08
	G3/4	○	●	●	B12
	G1	○	○	●	B16

Thread		SPB-1	SPB-2	SPB-3	Code
Male NPT Thread (ANSI B1.20.1)	1/4	●	○	○	N04
	3/8	●	○	○	N06
	1/2	●	○	○	N08
	3/4	●	●	●	N12
	1	○	○	●	N16

● Standard Option

Order Codes

SPB - 2 - O - 10 - B12 - O - D200

① ② ③ ④ ⑤ ⑥ ⑦

① Type

Plastic Filler Breather	**SPB**

② Version

Threaded version; Cap diameter Ø45 mm (Ø1.77 in)	**1**
Threaded version; Cap diameter Ø70 mm (Ø2.76 in)	**2**
Threaded version; Cap diameter Ø101 mm (Ø3.98 in)	**3**

③ Pressurisation

Without pressurisation (standard option)	**0**
Pressurised at 0,2 bar / 3 PSI	**B0.2**
Pressurised at 0,35 bar / 5 PSI	**B0.35**
Pressurised at 0,7 bar / 10 PSI	**B0.7**

Type SPB-1 is only available without pressurisation. Please see page 26 for details.

④ Air Filter Element (Material / Micron Rating)

10 µm Foam / PUR (standard option)	**10**
40 µm Foam / PUR	**40**
3 µm Inorganic Glass-Fibre, pleated	**E03**
10 µm Filter Paper, pleated	**L10**

Options E03 and L10 are only available for Type SPB-3. Contact STAUFF for alternative materials / micron ratings.

⑤ Connection Thread (Male)

G1/4 (for SPB-1 only)	**B04**
G3/8 (for SPB-1 and 2 only)	**B06**
G1/2 (for SPB-1, 2 and 3)	**B08**
G3/4 (for SPB-2 and 3 only)	**B12**
G1 (for SPB-3 only)	**B16**
1/4 NPT (for SPB-1 only)	**N04**
3/8 NPT (for SPB-1 only)	**N06**
1/2 NPT (for SPB-1 only)	**N08**
3/4 NPT (for SPB-1, 2 and 3)	**N12**
1 NPT (for SPB-3 only)	**N16**

⑥ Anti-Splash Feature

With anti-splash feature (standard option)	**A**
Without anti-splash feature	**0**

The anti-splash feature for the SPB-1, can only be achieved in conjunction with a dipstick, but is not available for the SPB-1 with connection sizes B04 and N04. Please see page 26 for details.

⑦ Dipstick

Plastic dipstick (200 mm / 7.88 in) with integrated anti-splash feature	**D200**
Plastic dipstick (300 mm / 11.81 in) with integrated anti-splash feature	**D300**
Plastic dipstick (300 mm / 11.81 in) with integrated magnet	**D300M**
Without dipstick	**-**

A shorter dipstick length can be achieved by simply cutting down the total length according to individual requirements. Please see page 26 for details.

Dimensional drawings: All dimensions in mm (in).

Plastic Filler Breather Types SPB-4 / 5 (Flange Version)

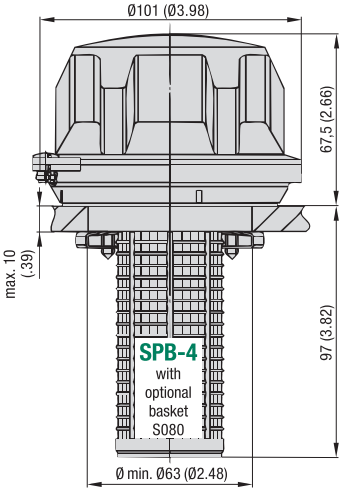

Clamping jaw installation to a single mounting hole

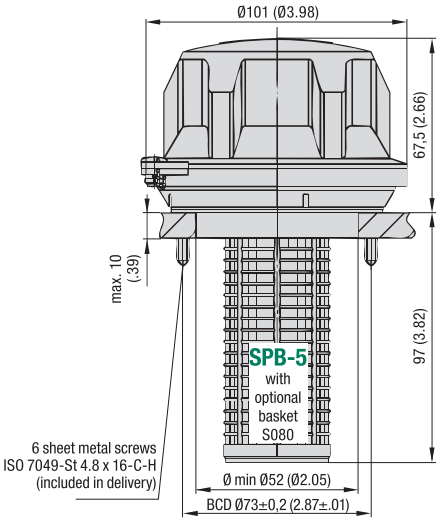

Installation to a six-hole bolt pattern with flange interface similar to DIN 24557, Part 2



Characteristics

Designed to be used as filler ports for hydraulic reservoirs, allowing the reservoir to breathe whilst protecting it from contamination found in harsh environments

Features
- Cap diameter of Ø101 mm / Ø3.98 in
- Either for clamping installation (with 3 clamping jaws and cross-drive screws) or with a six-hole bolt pattern
- Operating temperature range: -40 °C ... +120 °C / -40 °F ... +248 °F

Materials
- Made of non-corrosive materials
- Body and cap made of glass-fibre reinforced Polyamide (PA)
- Seals made of NBR (Buna-N®)

Contact STAUFF for alternative materials.

Accessories / Options
- Plastic basket (800 µm)
- Pressurisation up to 0,7 bar / 10 PSI
- Air filter element
- Anti-splash feature
- Plastic dipstick with integrated anti-splash feature
- Plastic dipstick with integrated magnet

Please see page 26 for details.

Maximum Air Flow Rate
- 1,00 m³/min / 35.31 cfm for SPB-4 / 5

Please see page 27 for detailed air flow curves.

Installation
- Recommended mounting space: Ø122 mm / Ø4.80 in
- Six-hole bolt pattern for flange interfaces similar to DIN 24557, part 2 (Type SPB-5):

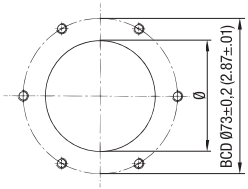

- 6 sheet metal screws (ISO 7049-St 4.8 x 16-C-H) are included in delivery (Type SPB-5); can be replaced by regular M5 socket cap screws (ISO 4762), if required
- Recommended diameters of the screw holes, depending on the sheet thickness of the reservoir (Type SPB-5): Ø4,0 mm / Ø.16 in at a thickness of 1,20 mm / .05 in, Ø4,1 mm / Ø.16 in at a thickness of 2,00 mm / .08 in, Ø4,3 mm / Ø.17 in at a thickness of 4,00 mm / .16 in, and Ø4,4 mm / Ø.17 in at a thickness of 5,00 mm / .20 in

Order Codes

SPB - 4 - O - 10 - S080 - A - D200

① ② ③ ④ ⑤ ⑥ ⑦

① Type

Plastic Filler Breather	**SPB**

② Version

Bayonet version for clamping jaw installation to a single mounting hole; Cap diameter Ø101 mm (Ø3.98 in)	**4**
Bayonet Version with six-hole bolt pattern for flange interfaces similar to DIN 24557, part 2; Cap diameter Ø101 mm (Ø3.98 in)	**5**

③ Pressurisation

Without pressurisation (standard option)	**0**
Pressurised at 0,2 bar / 3 PSI	**B0.2**
Pressurised at 0,35 bar / 5 PSI	**B0.35**
Pressurised at 0,7 bar / 10 PSI	**B0.7**

Please see page 26 for details.

④ Air Filter Element (Material / Micron Rating)

10 µm Foam / PUR (standard option)	**10**
40 µm Foam / PUR	**40**
3 µm Inorganic Glass-Fibre, pleated	**E03**
10 µm Filter Paper, pleated	**L10**

Contact STAUFF for alternative materials / micron ratings.

⑤ Basket Option

Plastic basket (105 mm / 4.13 in)	**S080**
Telescopic plastic basket (max. 205 mm / max. 8.07 in)	**S200**
Plastic basket with flange interface similar to DIN 24557, part 2 (95 mm / 3.74 in)	**S095P**
Without basket	**X**

Option S095P is only available for Type SPB-5.
Please see page 26 for details.

⑥ Anti-Splash Feature

With anti-splash feature (standard option)	**A**
Without anti-splash feature	**0**

⑦ Dipstick

Plastic dipstick (200 mm / 7.88 in) with integrated anti-splash feature	**D200**
Plastic dipstick (300 mm / 11.81 in) with integrated anti-splash feature	**D300**
Plastic dipstick (300 mm / 11.81 in) with integrated magnet	**D300M**
Without dipstick	**-**

A shorter dipstick length can be achieved by simply cutting down the total length according to individual requirements. When choosing a combination of a basket and a dipstick, the dipstick has to be at least 15 mm / .59 in shorter than the basket.
Please see page 26 for details.

Dimensional drawings: All dimensions in mm (in).

B

Plastic Dipstick
Types DS-1 / 2 / 3
Anti-Splash Feature



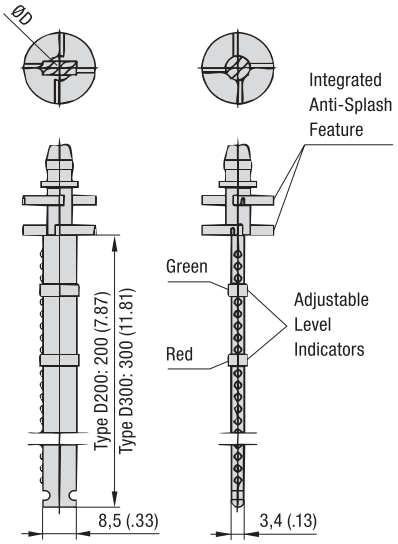

Connection		Code	For Type	Suitable Dipstick*	ØD (mm/in)
Male BSP Thread (ISO 228)	G1/4	B04	SPB-1	Dipstick Option Not Available	
	G3/8	B06	SPB-1/2	DS-1	10 / .39
	G1/2	B08	SPB-1/2/3	DS-2	14 / .55
			SPBM		
	G3/4	B12	SPB-1/2	DS-3	18 / .71
			SMBT-80	DS-1	10 / .39
	G1	B16	SPB-3	DS-3	18 / .71
			SMBT-80	DS-1	10 / .39
Male NPT Thread (ANSI B1.20.1)	1/4	N04	SPB-1	Dipstick Option Not Available	
	3/8	N06	SPB-1	DS-1	10 / .39
	1/2	N08	SPB-1	DS-2	14 / .55
	3/4	N12	SPB-1/2/3	DS-3	18 / .71
			SMBT-80	DS-1	10 / .39
	1	N16	SPB-3	DS-3	18 / .71
			SMBT-80	DS-1	10 / .39
Plastic Basket	S080		SPB-4/5	DS-3	18 / .71
	S095-P		SPB-5	DS-3	18 / .71
	S200		SPB-4/5	DS-3	18 / .71
w/o Basket		X	SPB-4/5	DS-3	18 / .71
			SMBB-80	DS-1	10 / .39

* When ordered seperately, please add the length of the dipstick (in mm) to the ordering code (e.g. DS-2-300).

For all Plastic Filler Breathers (except Type SPB-1 with connection sizes B04 and N04), dipsticks made of Polyamide are available as an option. These dipsticks are available in 2 standard lengths of 200 mm / 7.87 in and 300 mm / 11.81 in and equipped with 2 adjustable level indicators in green and red colour.

A shorter dipstick length can be achieved by simply cutting down the total length according to individual requirements. The markings at 25,4 mm / 1.00 in to assist simply cutting.

All dipsticks have an integrated anti-splash feature protecting the SPB from backspilling fluid and avoiding an early breakdown of the air filter element.

Optionally a powerful magnet collects metal particles from the oil and gives extra safety for your application.

Please note: When choosing a combination of a dipstick and a basket (see below), the dipstick has to be at least 15 mm / .59 in shorter than the basket.

Special designs and alternative materials available on request. Please contact STAUFF for further details.

Plastic Basket ▪ Types S080 / S095-P / S200

For the Plastic Filler Breathers SPB-4 and SPB-5, different Types of baskets are available as an option. All baskets have a reinforced 0,8 x 3,5 mm / .03 x .14 in mesh (800 µm), so that rough dirt particles are filtered out of the medium and a smooth flow into the tank is being ensured.

The **Plastic Basket S080** (length of 105 mm / 4.13 in) snaps into the breather housing and suitable for the SPB-4 and SPB-5.

The **Plastic Basket S095-P** (length of 95 mm / 3.74 in) is equipped with a six-hole bolt pattern with flange interface similar to DIN 24557, part 2. It is suitable for the SPB-5 / SMBB-80 only and is installed between the breather housing and the reservoir.

The **Telescopic Plastic Basket S200** (maximum length of 205 mm / 8.07 in) is ideal to further improve the straining ability and oil flow-through and allowing longer dipstick lengths, where reservoir depth allows. It also snaps into the breather housing and is suitable for the SPB-4 and SPB-5.

Please note: When choosing a combination of a dipstick (see above) and a basket, the dipstick has to be at least 15 mm / .59 in shorter than the basket.

Special designs and alternative materials available on request.
Please contact STAUFF for further details.

Plastic Basket
S080 (for SPB-4/5)
Material: Polypropylene (PP)

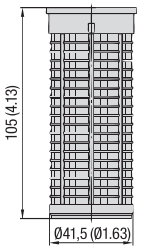

Plastic Basket
S095-P (only for SPB-5 / SMBB-80)
Material: Polyamide (PA)

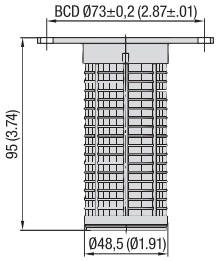

Six-hole bolt pattern with flange interface according to DIN 24557, part 2

Telescopic Plastic Basket
S200 (for SPB-4/5)
Material: Polypropylene (PP)

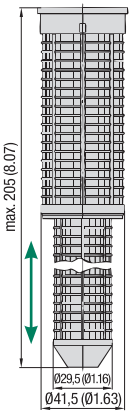

Pressurisation

Many tank filler breathers of the SPB, SMBB and SMBT series are also available as pressurised versions. Information on the specific valve and pressurization settings that are available by default can be found on the corresponding catalogue pages.

When the fluid level inside the reservoir rises, no air is expelled from the reservoir until the pressurisation level is reached. With decreasing fluid level inside the reservoir, the tank pressure drops and it is ensured that air is drawn into the reservoir.

Due to less breathing, the service life of a filler breather and the oil can be increased by using the pressurisation feature. It also minimizes foaming and cavitation, and provides additional protection from moisture entering the reservoir which causes erosion and oil degradation.

Further Accessories / Options



Weld Riser ▪ Type WR
Suitable for SPB-5
(See page 39 for details)



Side Mount Bracket (Polyamide) ▪ Type ASMB-1
Suitable for SPB-5
(See page 38 for details)



Side Mount Bracket (Aluminium) ▪ Type ASMB-2
Suitable for SPB-5
(See page 38 for details)

Dimensional drawings: All dimensions in mm (in).

Pressure Drop Flow Curves
Plastic Filler Breathers

Type SPB-1 (into / out of the tank)

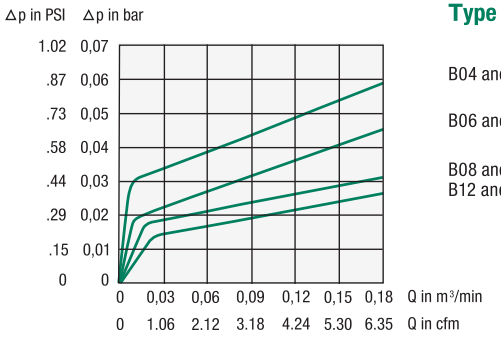

B04 and N04 (into / out of the tank)

B06 and N06 (into / out of the tank)

B08 and N08 (into / out of the tank)
B12 and N12 (into / out of the tank)

Type SPB-2 (into / out of the tank)

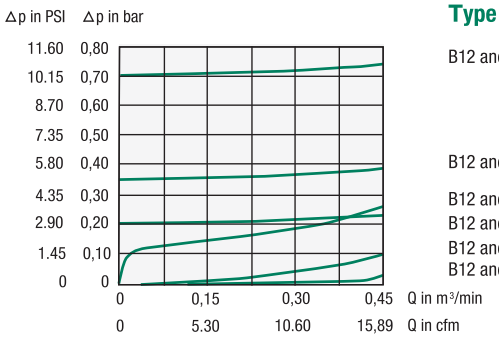

B12 and N12 (out of the tank; pressurised at 0,7 bar / 10 PSI)

B12 and N12 (out of the tank; pressurised at 0,35 bar / 5 PSI)

B12 and N12 (into the tank; pressurised at 0,7 bar / 10 PSI, 0,35 bar / 5 PSI or 0,2 bar / 3 PSI)
B12 and N12 (out of the tank; pressurised at 0,2 bar / 3 PSI)
B12 and N12 (out of the tank; without pressurisation)
B12 and N12 (into the tank; without pressurisation)

Type SPB-3 (into / out of the tank)

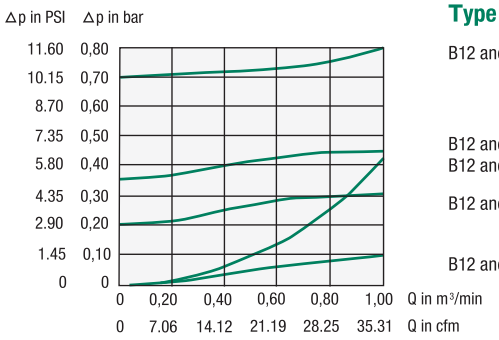

B12 and N12 (out of the tank; pressurised at 0,7 bar / 10 PSI)

B12 and N12 (out of the tank; pressurised at 0,35 bar / 5 PSI)
B12 and N12 (into the tank; pressurised at 0,7 bar / 10 PSI, 0,35 bar / 5 PSI or 0,2 bar / 3 PSI)

B12 and N12 (out of the tank; pressurised at 0,2 bar / 3 PSI)

B12 and N12 (into / out of the tank; without pressurisation)

Type SPB-4/5 (into the tank)

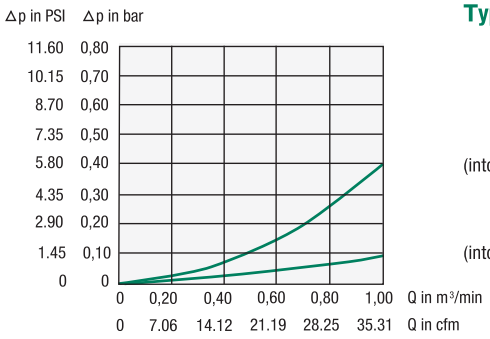

(into the tank; pressurised at 0,7 bar / 10 PSI, 0,35 bar / 5 PSI or 0,2 bar / 3 PSI)

(into the tank; without pressurisation)

Type SPB-4/5 (out of the tank)

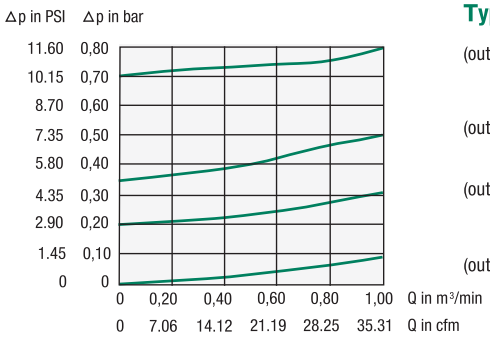

(out of the tank; pressurised at 0,7 bar / 10 PSI)

(out of the tank; pressurised at 0,35 bar / 5 PSI)

(out of the tank; pressurised at 0,2 bar / 3 PSI)

(out of the tank; without pressurisation)

B

Plastic Filler Breather
Type SPBN
(Compact Design; Threaded or Bayonet Version)



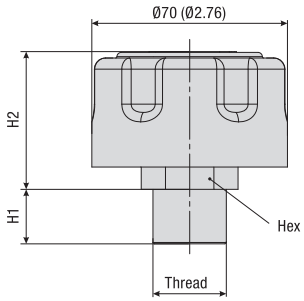

SPBN
Threaded Version

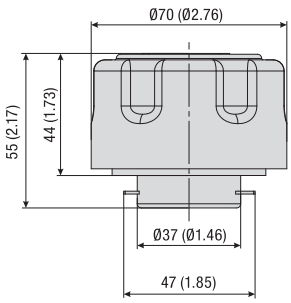

SPBN
Bayonet Version

Characteristics

Designed to be used as filler ports for hydraulic reservoirs, allowing the reservoir to breathe whilst protecting it from contamination found in harsh environments; ideal for applications in which space is limited

Features
- Cap diameter of Ø70 mm / Ø2.76 in
- Threaded version, equipped with male BSP thread (ISO 228) or male NPT thread (ANSI B1.20.1)
- Bayonet version for flange interfaces, with a six-hole bolt pattern, similar to DIN 24557, part 2
- Operating temperature range: -40 °C ... +120 °C / -40 °F ... +248 °F

Materials
- Body and cap made of glass-fibre reinforced Polyamide (PA)
- Socket made of Steel, zinc-plated
- Bayonet flange made of Steel, zinc-plated
- Basket made of Steel, zinc-plated or Polyamide (PA)
- Seals made of NBR (Buna-N®)

Contact STAUFF for alternative materials.

Accessories / Options
- Mounting set including bayonet flange, steel or plastic basket (800 µm), gaskets and bolts
- Pressurisation up to 0,7 bar / 10 PSI
- Air filter element
- Anti-splash feature (for Threaded version only)
- Plastic dipstick with integrated anti-splash feature
- Plastic dipstick with integrated magnet
- Oil Demister

Please see pages 29 and 53 for details.

Maximum Air Flow Rate
- 0,40 m^3/min / 14.13 cfm

Please see page 29 for detailed air flow curves.

Installation
- Six-hole bolt pattern for flange interfaces similar to DIN 24557, part 2 (bayonet version with mounting set):

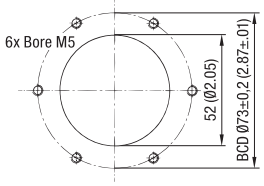

- 6 slotted pan head screws (ISO 1580 M5 x 12-5.8) are included in delivery of the bayonet version with mounting set

Dimensions (Threaded Version)

Thread	Dimensions (mm/in)		
	H1	H2	Hex
Male G3/4 BSP (ISO 228)	19,5 / .77	49,5 / 1.95	30 / 1.18

Thread	Dimensions (mm/in)		
	H1	H2	Hex
Male 3/4 NPT (ANSI B1.20.1)	19,5 / .77	49,5 / 1.95	30 / 1.18

Order Codes

SPBN - 2 - O - 10 - B12 - O - D200

① ② ③ ④ ⑤ ⑥ ⑦

① Type

Plastic Filler Breather (Compact Design)	**SPBN**

② Version

Cap diameter Ø70 mm (Ø2.76 in)	**2**

③ Pressurisation

Without pressurisation (standard option)	**O**
Pressurised at 0,2 bar / 3 PSI	**B0.2**
Pressurised at 0,35 bar / 5 PSI	**B0.35**
Pressurised at 0,7 bar / 10 PSI	**B0.7**

Please see page 29 for details.

④ Air Filter Element (Material / Micron Rating)

10 µm Foam / PUR (standard option)	**10**
40 µm Foam / PUR	**40**

Contact STAUFF for alternative materials / micron ratings.

⑤ Connection

Threaded version; Male G3/4 thread	**B12**
Threaded version; Male 3/4 NPT thread	**N12**
Bayonet version; Breather only	**BS**
Bayonet version; Breather including mounting set (with bayonet flange, gaskets and bolts)	**BM**
Bayonet version; Option BS and metal basket with flange interface (80 mm / 3.15 in)	**S080**
Bayonet version; Option BS and metal basket with flange interface (100 mm / 3.94 in)	**S100**
Bayonet version; Option BS and metal basket with flange interface (150 mm / 5.91 in)	**S150**
Bayonet version; Option BS and metal basket with flange interface (200 mm / 7.87 in)	**S200**
Bayonet version; Option BS and plastic basket with flange interface (95 mm / 3.74 in)	**S095P**

⑥ Anti-Splash Feature

With anti-splash feature	**A**
Without anti-splash feature (standard option)	**O**

Please see page 29 for details.

⑦ Dipstick

Plastic dipstick (200 mm / 7.88 in) with integrated anti-splash feature	**D200**
Plastic dipstick (300 mm / 11.81 in) with integrated anti-splash feature	**D300**
Plastic dipstick (300 mm / 11.81 in) with integrated magnet	**D300M**
Without dipstick	**-**

A shorter dipstick length can be achieved by simply cutting down the total length according to individual requirements. Please see page 26 for details.

Dimensional drawings: All dimensions in mm (in).

Plastic Dipstick
Anti-Splash Feature

For all Plastic Filler Breathers SPBN, dipsticks made of Polyamide are available as an option. These dipsticks are available in 2 standard lengths of 200 mm / 7.87 in and 300 mm / 11.81 in and equipped with 2 adjustable level indicators in green and red colour. A shorter dipstick length can be achieved by simply cutting down the total length according to individual requirements.

All dipsticks have an integrated anti-splash feature protecting the SPBN from backspilling fluid and avoiding an early breakdown of the air filter element. For Plastic Filler Breathers without dipstick, the anti-splash function can be achieved by an integrated concave baffle.

Please note: When choosing a combination of a dipstick and a basket, the dipstick has to be at least 15 mm / .59 in shorter than the basket.

Special designs and alternative materials available on request.
Please contact STAUFF for further details.

Pressurisation

Many tank filler breathers of the SPB, SMBB and SMBT series are also available as pressurised versions. Information on the specific valve and pressurization settings that are available by default can be found on the corresponding catalogue pages.

When the fluid level inside the reservoir rises, no air is expelled from the reservoir until the pressurisation level is reached. With decreasing fluid level inside the reservoir, the tank pressure drops and it is ensured that air is drawn into the reservoir.

Due to less breathing, the service life of a filler breather and the oil can be increased by using the pressurisation feature. It also minimizes foaming and cavitation, and provides additional protection from moisture entering the reservoir which causes erosion and oil degradation.

Mounting Set for Baskets
(including Bayonet Flange, Gaskets and Bolts)

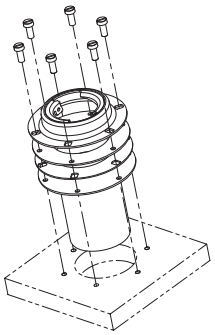



Scope of Delivery / Order Codes

Mounting sets for baskets include the following components:

- 6 slotted pan head screws made of steel, zinc-plated (ISO 1580 M5 x 12-5.8)
- Bayonet flange made of steel, zinc-plated, with six-hole bolt pattern acc. to DIN 24557, part 2
- 2 gaskets made of NBR (Buna-N®) - one for underneath and one for on top of the basket
- Metal or plastic basket (only if required):

Metal basket (80 mm / 3.15 in):	**S-080-M-F-SPBN-BS-B**
Metal basket (100 mm / 3.94 in):	**S-100-M-F-SPBN-BS-B**
Metal basket (150 mm / 5.91 in):	**S-150-M-F-SPBN-BS-B**
Metal basket (200 mm / 7.87 in):	**S-200-M-F-SPBN-BS-B**
Plastic basket (95 mm / 3.74 in):	**S-095-P-F-SPBN-BS-B**
Without basket:	**Adapter-SPBN-BM-B**

Mounting sets can also be ordered as part of a complete breather assembly.
Please see page 28 for details.

Further Accessories / Options



Extended Bayonet Flange ▪ Type EBF
Suitable for SPBN; Bayonet Version BM
(See page 39 for details)



Weld Riser ▪ Type WR
Suitable for SPBN; Bayonet Version BM
(See page 39 for details)



Side Mount Bracket (Polyamide) ▪ Type ASMB-1
Suitable for SPBN; Bayonet Version BM
(See page 38 for details)



Side Mount Bracket (Aluminium) ▪ Type ASMB-2
Suitable for SPBN; Bayonet Version BM
(See page 38 for details)

Pressure Drop Flow Curves
Plastic Filler Breathers

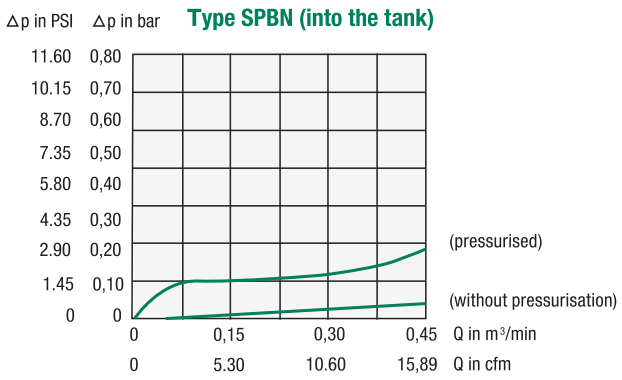

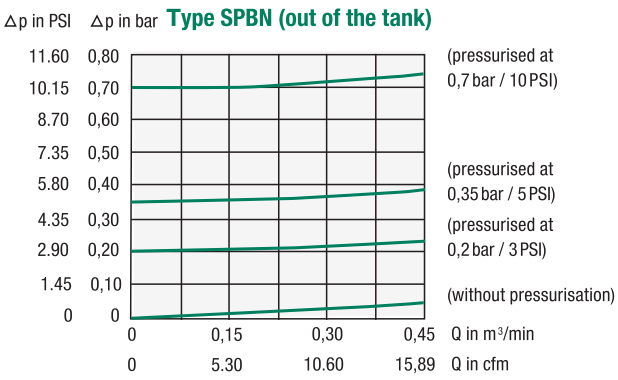

B

Plastic Filler Breather Mini
Type SPBM
(Threaded Version)



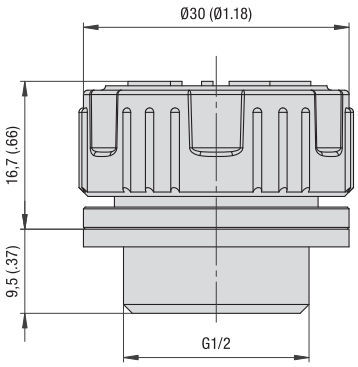

Characteristics

Designed to be used as filler ports for hydraulic reservoirs, allowing the reservoir to breathe whilst protecting it from contamination found in harsh environments

Features
- Available with different cap Logos
- Threaded version, equipped with male BSP thread (ISO 228)
- Operating temperature range: -40 °C ... +120 °C / -40 °F ... +248 °F

Materials
- Made of non-corrosive materials
- Body and cap made of glass-fibre reinforced Polyamide (PA)
- Seals made of NBR (Buna-N®)

Contact STAUFF for alternative materials.

Accessories / Options
- Air filter element
- Anti-splash feature
- Plastic dipstick with integrated anti-splash feature
- Plastic dipstick with integrated magnet

Please see page 26 for details.

Maximum Air Flow Rate
- 0,25 m³/min / 8.83 cfm

Please see below for detailed air flow curves.

Installation
- Recommended mounting spaces: Ø48 mm / Ø1.89 in

Order Codes

SPBM	-	1	-	S	-	10	-	B08	-	A	-	D200
①		②		③		④		⑤		⑥		⑦

① Type

Plastic Filler Breather Mini	**SPBM**

② Version

Threaded version; Cap diameter Ø30 mm (Ø1.18 in)	**1**

③ Logo

STAUFF Logo (black cap)	**S**
OIL Logo (red cap)	**O**
Neutral design without any Logo	**N**

Contact STAUFF for special Logos / Colors

④ Air Filter Element (Material / Micron Rating)

Without air filter element	**0**
10 µm Foam / PUR (standard option)	**10**

Contact STAUFF for alternative materials / micron ratings.

⑤ Connection Thread (Male)

G1/2 BSP	**B08**

⑥ Anti-Splash Feature

With anti-splash feature (standard option)	**A**
Without anti-splash feature	**0**

⑦ Dipstick

Plastic dipstick (200 mm / 7.88 in) with integrated anti-splash feature	**D200**
Plastic dipstick (300 mm / 11.81 in) with integrated anti-splash feature	**D300**
Plastic dipstick (300 mm / 11.81 in) with integrated magnet	**D300M**
Without dipstick	**-**

A shorter dipstick length can be achieved by simply cutting down the total length according to individual requirements. Please see page 26 for details.

Pressure Drop Flow Curves

Type SPBM (into the tank)

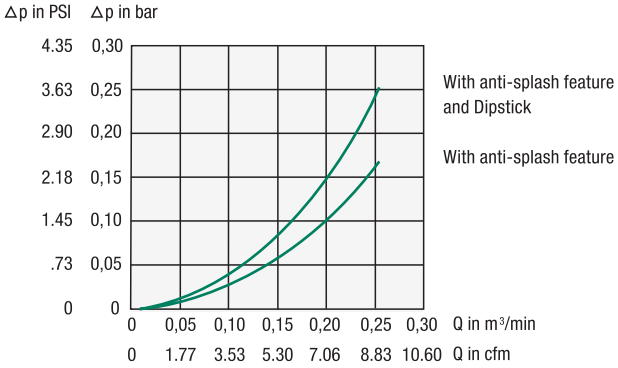

Type SPBM (out of the tank)

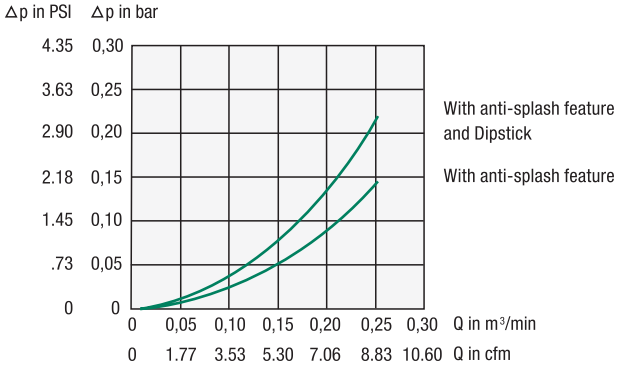

Dimensional drawings: All dimensions in mm (in).

Plastic Filler Breather
Type SES
(Threaded or Welded Versions)

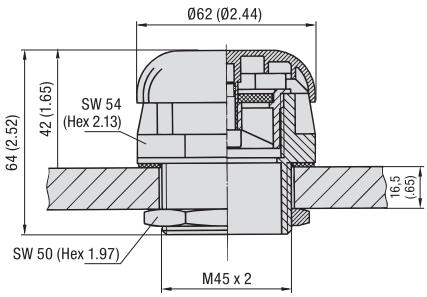

Threaded Version
SES-1

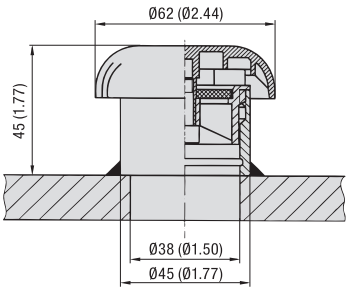

Welded Version
SES-2



Order Codes

SES - **1** - **M300**
① ② ③

① Type

Plastic Filler Breather	**SES**

② Version

Threaded version	**1**
Welded version	**2**

③ Basket / Dipstick Option

Plastic basket (81 mm / 3.19 in)	**S**
Metal dipstick (300 mm / 11.81 in)	**M300**
Metal dipstick (500 mm / 19.69 in)	**M500**
Without basket / dipstick	**0**

Accessories



Plastic Basket

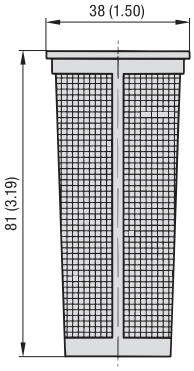



Metal Dipstick

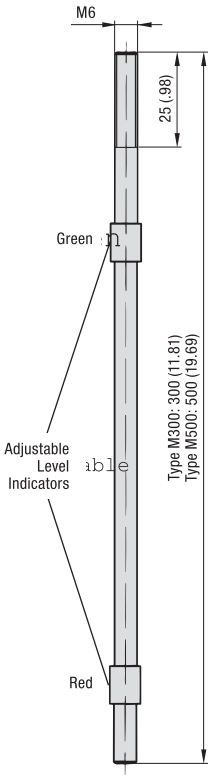

Characteristics

Designed to be used as filler ports for hydraulic reservoirs, allowing the reservoir to breathe whilst protecting it from contamination found in harsh environments

Features

- Cap diameter of Ø62 mm / Ø2.44 in
- Threaded version, equipped with male Metric ISO thread M45 x 2 and lock nut, or welded version with welding socket made of Steel (1.0718), untreated
- Supplied with 45 µm air filter element
- Operating temperature range:
  -40 °C ... +120 °C / -40 °F ... +248 °F

Materials

- Breather cap made of Polyamide (PA)
- Breather body / stud made of Polyamide (PA)
- Nut (Type SES-1) made of Steel (1.0718); Polyamide (PA) available on request
- Welding socket (Type SES-2) made of Steel (1.0718), untreated; Stainless Steel (V2A) available on request
- Air filter element made of Sintered Bronze
- Basket made of Polyamide (PA)
- Dipstick made of Steel (1.0718)
- Seals made of NBR (Buna-N®)

Contact STAUFF for alternative materials.

Accessories / Options

- Plastic basket (300 µm)
- Metal dipstick

Maximum Air Flow Rate

- 0,30 m³/min / 10.60 cfm

Contact STAUFF for detailed air flow curves.

Installation

- Recommended diameter in the reservoir cap
  SES-1: Ø46 ±1 mm / Ø1.81 in ±.04 mm
  SES-2: Ø38 ±1 mm / Ø1.50 in ±.04 mm

Dimensional drawings: All dimensions in mm (in).

B

Metal Filler Breather
Type SMBT-47
(Threaded Version)



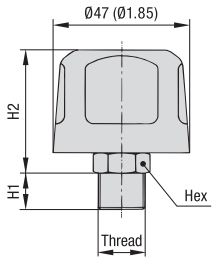

Characteristics

Designed to be used as filler ports for hydraulic reservoirs, allowing the reservoir to breathe whilst protecting it from contamination found in harsh environments

Features
- Cap diameter of Ø47 mm / Ø1.85 in
- Threaded version, equipped with male BSP thread (ISO 228) or male NPT thread (ANSI B1.20.1)
- Operating temperature range: -30 °C ... +120 °C / -22 °F ... +248 °F

Materials
- Breather cap made of Steel, zinc/nickel-plated (Fe/Zn Ni 6) and free of hexavalent chromium CrVI (standard option); chrome-plated and epoxy-coated versions available
- Threaded socket made of Steel, zinc-plated

Contact STAUFF for alternative materials.

Accessories / Options
- Air filter element

Maximum Air Flow Rate
- 0,40 m³/min / 14.13 cfm

Contact STAUFF for detailed air flow curves.

Dimensions

Thread	Dimensions (mm/in)		
	H1	H2	Hex
Male G1/4 BSP (ISO 228)	10 / .39	41 / 2.38	17 / .67
Male G3/8 BSP (ISO 228)	13 / .51	41 / 2.38	19 / .74
Male G1/2 BSP (ISO 228)	14 / .55	41 / 2.38	22 / .88

Thread	Dimensions (mm/in)		
	H1	H2	Hex
Male 1/4 NPT (ANSI B1.20.1)	13 / .51	41 / 2.38	17 / .67
Male 3/8 NPT (ANSI B1.20.1)	15 / .59	41 / 2.38	19 / .74

Contact STAUFF for alternative threads.

Order Codes

SMBT - 47 - S - 10 - O - B08

① ② ③ ④ ⑤ ⑥

① Type / Version

Metal Filler Breather; Threaded version	**SMBT**

② Cap Diameter / Material / Surface Finishing

Cap diameter Ø47 mm (Ø1.85 in); Breather cap made of Steel, zinc/nickel-plated (standard option)	**47**
Cap diameter Ø47 mm (Ø1.85 in); Breather cap made of Steel, chrome-plated	**47C**
Cap diameter Ø47 mm (Ø1.85 in); Breather cap made of Steel, expoxy-coated	**47E**

③ Label

With STAUFF logo (standard option)	**S**
Neutral design without any logo	**N**

④ Air Filter Element (Material / Micron Rating)

Without Breather Function	**0**
3 µm Filter Paper	**03**
10 µm Foam / PUR (standard option)	**10**
40 µm Foam / PUR	**40**

Contact STAUFF for alternative materials / micron ratings.

⑤ Pressurisation

Without pressurisation (standard option)	**0**

No pressurisation available for this cap diameter.

⑥ Connection Thread (Male)

G1/4	**B04**
G3/8	**B06**
G1/2	**B08**
1/4 NPT	**N04**
3/8 NPT	**N06**

Contact STAUFF for alternative threads.

Dimensional drawings: All dimensions in mm (in).

Metal Filler Breather Type SMBB-47 (Bayonet Version)

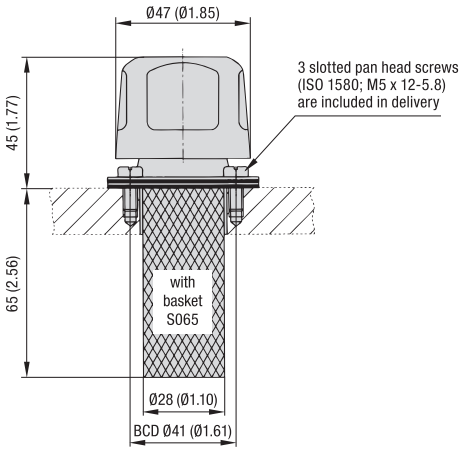



Characteristics

Designed to be used as filler ports for hydraulic reservoirs, allowing the reservoir to breathe whilst protecting it from contamination found in harsh environments

Features

- Cap diameter of Ø47 mm / Ø1.85 in
- Bayonet version with a three-hole bolt pattern
- Operating temperature range:
  -30 °C ... +120 °C / -22 °F ... +248 °F

Materials

- Breather cap made of Steel, zinc/nickel-plated (Fe/Zn Ni 6) and free of hexavalent chromium CrVI (standard option); chrome-plated and epoxy-coated versions available
- Bayonet flange made of Steel, zinc-plated
- Basket made of Steel, zinc-plated
- Seals made of Cork

Contact STAUFF for alternative materials.

Accessories / Options

- Metal basket (800 µm)
- Air filter element

Maximum Air Flow Rate

- 0,40 m³/min / 14.13 cfm

Contact STAUFF for detailed air flow curves.

Installation

- Three-hole bolt pattern for flange interfaces:

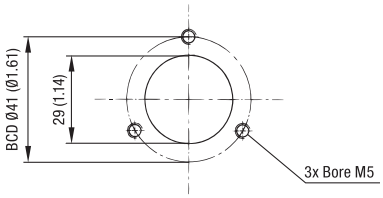

- 3 slotted pan head screws (ISO 1580 M5 x 12-5.8) are included in delivery; can be replaced by regular M5 bolts, if required

Order Codes

SMBB - 47 - S - 10 - O - C - S065

① ② ③ ④ ⑤ ⑥ ⑦

① Type / Version

Metal Filler Breather; Bayonet version	**SMBB**

② Cap Diameter / Material / Surface Finishing

Cap diameter Ø47 mm (Ø1.85 in); Breather cap made of Steel, zinc/nickel-plated (standard option)	**47**
Cap diameter Ø47 mm (Ø1.85 in); Breather cap made of Steel, chrome-plated	**47C**
Cap diameter Ø47 mm (Ø1.85 in); Breather cap made of Steel, expoxy-coated	**47E**

③ Label

With STAUFF logo (standard option)	**S**
Neutral design without any logo	**N**

④ Air Filter Element (Material / Micron Rating)

Without Breather Function	**0**
3 µm Filter Paper	**03**
10 µm Foam / PUR (standard option)	**10**
40 µm Foam / PUR	**40**

Contact STAUFF for alternative materials / micron ratings.

⑤ Pressurisation

Without pressurisation (standard option)	**0**

No pressurisation available for this cap diameter.

⑥ Sealing Material

Cork (standard option)	**C**

⑦ Basket Option

Metal basket (65 mm / 2.56 in) (standard option)	**S065**
Without basket	**0**

Dimensional drawings: All dimensions in mm (in).

B

Metal Filler Breather
Type SMBT-80
(Threaded Version)



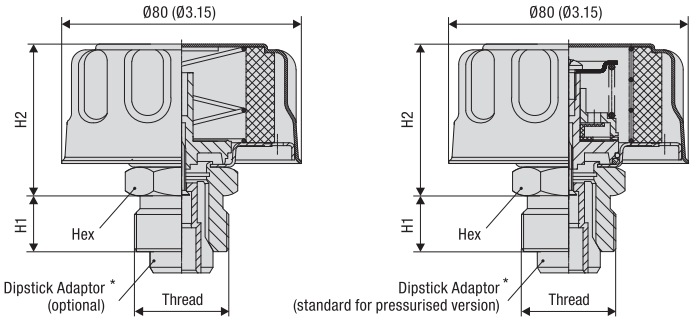

Without Pressurisation **Pressurised**

* Please note: The disptick adaptor is not available for connection threads G1/2 and 1/2 NPT.

Characteristics

Designed to be used as filler ports for hydraulic reservoirs, allowing the reservoir to breathe whilst protecting it from contamination found in harsh environments

Features
- Cap diameter of Ø80 mm / Ø3.15 in
- Threaded version, equipped with male BSP thread (ISO 228) or male NPT thread (ANSI B1.20.1)
- Operating temperature range: -30 °C ... +120 °C / -22 °F ... +248 °F

Materials
- Breather cap made of Steel, zinc/nickel-plated (Fe/Zn Ni 6) and free of hexavalent chromium CrVI (standard option); chrome-plated and epoxy-coated versions available
- Threaded socket made of Steel, zinc-plated
- Dipstick adaptor made of Polyamide (PA)

Contact STAUFF for alternative materials.

Accessories / Options
- Pressurisation up to 0,7 bar / 10 PSI
- Air filter element
- Dipstick adaptor suitable for plastic dipstick DS-1 (not for connection threads G1/2 and 1/2 NPT)
- Plastic dipstick DS-1 with integrated anti-splash feature (not for connection threads G1/2 and 1/2 NPT)
- Plastic dipstick with integrated magnet
- Oil Demister

Please see pages 26 and 53 for details.

Maximum Air Flow Rate
- 0,45 m³/min / 15.89 cfm

Contact STAUFF for detailed air flow curves.

Dimensions

Thread	Dimensions (mm/in)		
	H1	H2	Hex
Male G1/2 BSP (ISO 228)	14 / .55	54 / 2.13	24 / .94
Male G3/4 BSP (ISO 228)	16 / .63	54 / 2.13	30 / 1.18
Male G1 BSP (ISO 228)	19 / .75	54 / 2.13	36 / 1.42

Thread	Dimensions (mm/in)		
	H1	H2	Hex
Male 1/2 NPT (ANSI B1.20.1)	14 / .51	52,5 / 2.07	24 / .94
Male 3/4 NPT (ANSI B1.20.1)	16 / .59	52,5 / 2.07	30 / 1.18
Male G1 NPT (ANSI B1.20.1)	19 / .75	52,5 / 2.07	36 / 1.42

Order Codes

SMBT	-	80	-	S	-	10	-	O	-	B08	-	O
①		②		③		④		⑤		⑥		⑦

① Type / Version

Metal Filler Breather; Threaded version	**SMBT**

② Cap Diameter / Material / Surface Finishing

Cap diameter Ø80 mm (Ø3.15 in); Breather cap made of Steel, zinc/nickel-plated (standard option)	**80**
Cap diameter Ø80 mm (Ø3.15 in); Breather cap made of Steel, chrome-plated	**80C**
Cap diameter Ø80 mm (Ø3.15 in); Breather cap made of Steel, epoxy-coated	**80E**

③ Label

With STAUFF logo (standard option)	**S**
Neutral design without any logo	**N**

④ Air Filter Element (Material / Micron Rating)

Without Breather Function	**0**
3 µm Filter Paper	**03**
10 µm Foam / PUR (standard option)	**10**
40 µm Foam / PUR	**40**

Contact STAUFF for alternative materials / micron ratings.

⑤ Pressurisation

Without pressurisation (standard option)	**0**
Pressurised at 0,35 bar / 5 PSI	**B0.35**
Pressurised at 0,7 bar / 10 PSI	**B0.7**

Please see page 26 for details.

⑥ Connection Thread (Male)

G1/2	**B08**
G3/4	**B12**
G1	**B16**
1/2 NPT	**N08**
3/4 NPT	**N12**
1 NPT	**N16**

Contact STAUFF for alternative threads.

⑦ Dipstick

Without dipstick (standard option)	**0**
With dipstick adaptor suitable for dipstick DS-1 (not for connection threads G1/2 and 1/2 NPT)	**A**
With dipstick adaptor and plastic dipstick DS-1 (300 mm / 11.81 in) with integrated anti-splash feature (not for connection threads G1/2 and 1/2 NPT)	**D300**
Plastic dipstick (300 mm / 11.81 in) with integrated magnet	**D300M**

A shorter dipstick length can be achieved by simply cutting down the total length according to individual requirements.

Please note: The dipstick adaptor is required for the subsequent installation of plastic dipsticks DS-1 (see page 26 for details), and is included in delivery when ordering a pressurised version. The dipstick adaptor is not available for connection threads G1/2 and 1/2 NPT.

Dimensional drawings: All dimensions in mm (in).

Metal Filler Breather Type SMBB-80 (Bayonet Version)

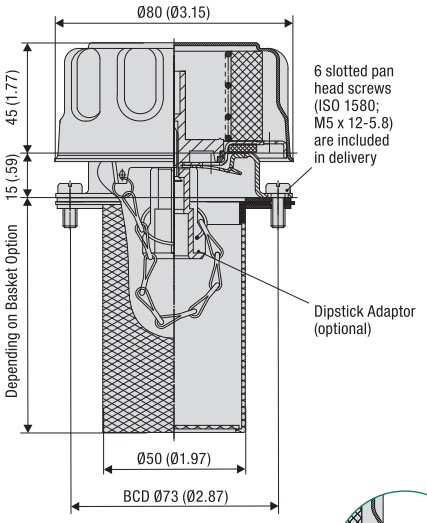

Without Pressurisation

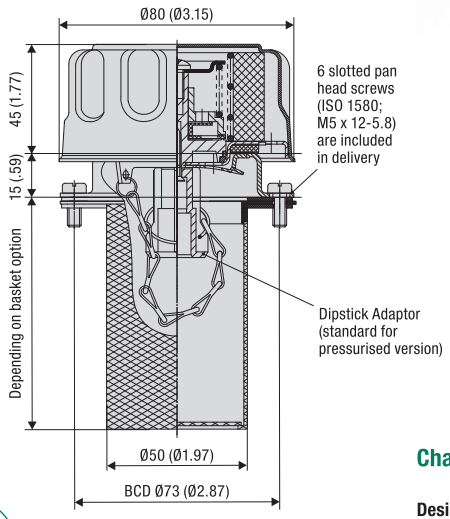

Pressurised

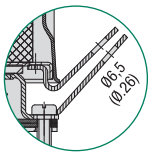

Locking Feature

(Recommended mounting space: Ø126 mm / Ø4.96 in)



Characteristics

Designed to be used as filler ports for hydraulic reservoirs, allowing the reservoir to breathe whilst protecting it from contamination found in harsh environments

Features

- Cap diameter of Ø80 mm / Ø3.15 in
- Bayonet version with a six-hole bolt pattern for flange interfaces similar to DIN 24557, part 2
- Operating temperature range: -30 °C ... +120 °C / -22 °F ... +248 °F

Materials

- Breather cap made of Steel, zinc/nickel-plated (Fe/Zn Ni 6) and free of hexavalent chromium CrVI (standard option); chrome-plated and epoxy-coated versions available
- Bayonet flange made of Steel, zinc-plated
- Basket made of Steel, zinc-plated or Polyamide (PA)
- Dipstick adaptor made of Polyamide (PA)
- Seals made of Cork (for filler breathers without pressurisation) or NBR (Buna-N®) (for pressurised filler breathers)

Contact STAUFF for alternative materials.

Accessories / Options

- Metal or plastic basket (800 µm)
- Pressurisation up to 0,7 bar / 10 PSI
- Air filter element
- Locking feature
- Dipstick adaptor (suitable for plastic dipstick DS-1)
- Plastic dipstick with integrated anti-splash feature
- Plastic dipstick with integrated magnet

Please see page 26 for details.

Maximum Air Flow Rate

- 0,45 m^3/min / 15.89 cfm

Contact STAUFF for detailed air flow curves.

Installation

- Six-hole bolt pattern for flange interfaces similar to DIN 24557, part 2:

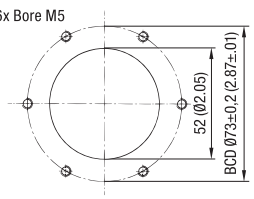

- 6 slotted pan head screws (ISO 1580 M5 x 12-5.8) are included in delivery; can be replaced by regular M5 bolts, if required

Order Codes

SMBB	-	80	-	S	-	L	-	10	-	O	-	C	-	S080	-	O
①		②		③		④		⑤		⑥		⑦		⑧		⑨

① Type / Version

Metal Filler Breather; Bayonet version	**SMBB**

② Cap Diameter / Material / Surface Finishing

Cap diameter Ø80 mm (Ø3.15 in); Breather cap made of Steel, zinc/nickel-plated (standard option)	**80**
Cap diameter Ø80 mm (Ø3.15 in); Breather cap made of Steel, chrome-plated	**80C**
Cap diameter Ø80 mm (Ø3.15 in); Breather cap made of Steel, expoxy-coated	**80E**

③ Label

With STAUFF logo (standard option)	**S**
Neutral design without any logo	**N**

④ Locking Feature

Without locking feature (standard option)	**O**
With locking feature (see drawing above)	**L**

⑤ Air Filter Element (Material / Micron Rating)

Without Breather Function	**O**
3 µm Filter Paper	**03**
10 µm Foam / PUR (standard option)	**10**
40 µm Foam / PUR	**40**

Contact STAUFF for alternative materials / micron ratings.

⑥ Pressurisation

Without pressurisation (standard option)	**O**
Pressurised at 0,35 bar / 5 PSI	**B0.35**
Pressurised at 0,7 bar / 10 PSI	**B0.7**

Please see page 26 for details.

⑦ Sealing Material

Cork (for filler breathers without pressurisation)	**C**
NBR (Buna-N®) (for pressurised filler breathers)	**B**

⑧ Basket Option

Without basket	**O**
Metal basket (80 mm / 3.15 in) (standard option)	**S080**
Plastic basket (95 mm / 3.74 in)	**S095P**
Metal basket (100 mm / 3.94 in)	**S100**
Metal basket (150 mm / 5.91 in)	**S150**
Metal basket (200 mm / 7.87 in)	**S200**

⑨ Dipstick

Without dipstick (standard option)	**O**
Dipstick adaptor (suitable for dipstick DS-1)	**A**
With dipstick adaptor and plastic dipstick DS-1 (300 mm / 11.81 in) with integrated anti-splash feature	**D300**
Plastic dipstick (300 mm / 11.81 in) with integrated magnet	**D300M**

A shorter dipstick length can be achieved by simply cutting down the total length according to individual requirements.

Please note: The dipstick adaptor is required for the subsequent installation of plastic dipsticks DS-1 (see page 26 for details), and is content of delivery when ordering a pressurised version.

Dimensional drawings: All dimensions in mm (in).

B

Metal Breather
Type SMBP-80
(Push-On Version)



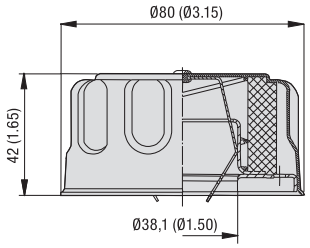

Characteristics

Designed to be used as filler ports for hydraulic reservoirs, allowing the reservoir to breathe whilst protecting it from contamination found in harsh environments

Features
- Cap diameter of Ø80 mm / Ø3.15 in
- Push-on version, suitable for pipe diameters up to 38 mm/ 1.50 in
- Operating temperature range: -30 °C ... +120 °C / -22 °F ... +248 °F

Materials
- Breather cap made of Steel, zinc/nickel-plated (Fe/Zn Ni 6) and free of hexavalent chromium CrVI (standard option); chrome-plated and epoxy-coated versions available

Contact STAUFF for alternative materials.

Accessories / Options
- Air filter element

Maximum Air Flow Rate
- 0,45 m^3/min / 15.89 cfm

Contact STAUFF for detailed air flow curves.

Order Codes

SMBP	-	80	-	S	-	10	-	O
①		②		③		④		⑤

① Type / Version

Metal Breather; Push-on version	**SMBP**

② Cap Diameter / Material / Surface Finishing

Cap diameter Ø80 mm (Ø3.15 in); Breather cap made of Steel, zinc/nickel-plated (standard option)	**80**
Cap diameter Ø80 (Ø3.15 in); Breather cap made of Steel, chrome-plated	**80C**
Cap diameter Ø80 (Ø3.15 in); Breather cap made of Steel, expoxy-coated	**80E**

③ Label

With STAUFF logo (standard option)	**S**
Neutral design without any logo	**N**

④ Air Filter Element (Material / Micron Rating)

Without Breather Function	**0**
10 µm Foam / PUR (standard option)	**10**
40 µm Foam / PUR	**40**

Contact STAUFF for alternative materials / micron ratings.

⑤ Dipstick

Without dipstick (standard option)	**0**

Dimensional drawings: All dimensions in mm (in).

Lockable Metal Filler Breather Type SMBL (Clamping, Threaded and Push-On Version)

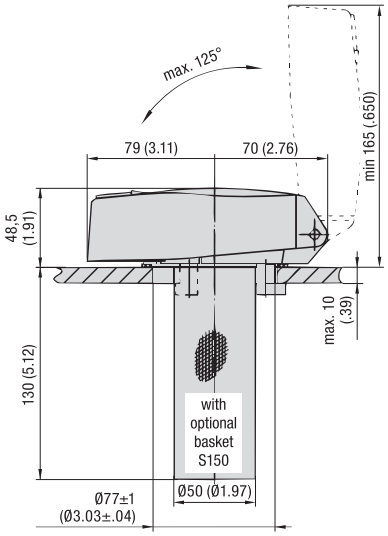

Clamping Version

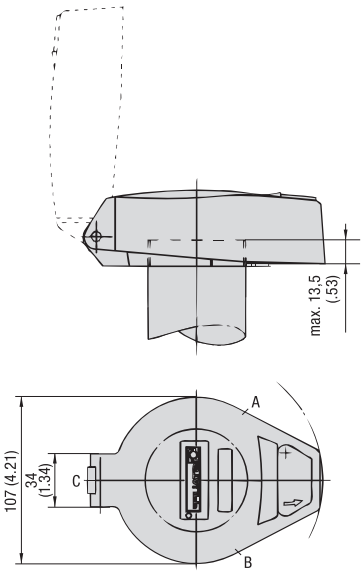

Threaded Version

Recommended mounting space: Ø162 mm / Ø6.38 in
2 locking screws M6 x 6 (DIN 916) at positions A and B

Push-On Version

3 locking screws M6 x 6 (DIN 916) at positions A, B and C



Clamping version with metal basket (150 mm / 5.91 in)

Characteristics

Designed to be used as lockable filler ports for hydraulic reservoirs, allowing the reservoir to breathe whilst protecting it from contamination found in harsh environments

Features

- Available as clamping version (with 3 clamping jaws), as threaded version (with female BSP thread) or push-on version, suitable for stand pipe mounting with pipe diameters up to 77,5 mm/ 3.05 in (secured by 3 locking screws)
- Key-lockable cap (2 keys included)
- Lock protected by rotating flap
- Operating temperature range: -30 °C ... +100 °C / -22 °F ... +212 °F
- Air flow in both directions, one direction only or no direction

Materials

- Breather cap made of Aluminium, lacquered (light-grey, RAL 9022)
- Breather body made of Aluminium and steel zinc-plated
- Basket made of Steel, zinc-plated or Polypropylene (PP)
- Seals made of NBR (Buna-N®) (standard option); FKM (Viton®) sealed version available

Contact STAUFF for alternative materials.

Accessories / Options

- Metal or plastic basket (800 µm; telescopic)
- Air filter element

Order Codes

SMBL	-	C	-	10	-	1	-	S150	-	B	-	O
①		②		③		④		⑤		⑥		⑦

① Type

Lockable Metal Filler Breather	**SMBL**

② Version

Clamping version with 3 clamping jaws; Installation to a tank mounting hole of Ø77±1 mm / Ø3.03±.04 in	**C**
Threaded version with female G2 BSP thread	**G32**
Threaded version with female G2-1/2 BSP thread	**G40**
Push-on version for stand pipe mounting	**P**

③ Air Filter Element (Material / Micron Rating)

Without Breather Function	**0**
10 µm Foam / PUR (standard option)	**10**
40 µm Foam / PUR	**40**

Contact STAUFF for alternative materials / micron ratings.

④ Air Flow

Air flow in both directions (standard option)	**1**
No air flow	**2**
Air flow only into the tank	**3**

⑤ Basket Option

Without basket	**0**
Metal basket (150 mm / 5.91 in) (standard option)	**S150**
Plastic basket (80 mm / 3.15 in)	**S080**
Telescopic plastic basket (max. 205 mm / max. 8.07 in)	**S200**

The baskets of the SMBB-47/80 series cannot be used in conjunction with the SMBL series.

⑥ Sealing Material

NBR (Buna-N®) (standard option)	**B**
FKM (Viton®)	**V**

⑦ Cap Design

Breather cap made of Aluminium, lacquered (light-grey, RAL 9022)	**0**

Dimensional drawings: All dimensions in mm (in).

B

Side Mount Bracket Type ASMB-1 (Polyamide Version)



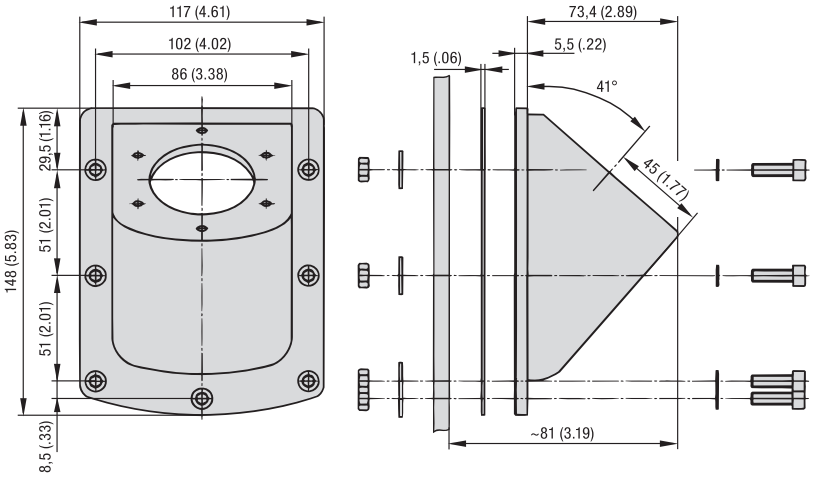

Characteristics

Lateral fastening of filler breathers with a six-hole flange connection similar to DIN 24557, part 2 to vertical or sloped walls of hydraulic reservoirs; ideal for applications in which space is limited

Suitability
- Suitable for Plastic Filler Breathers SPB-5 and SPBN (bayonet version) and Metal Filler Breathers SMBB-80

Materials
- Mounting bracket made of Polyamide (PA)
- Seal plate made of Klingerit
- Screws and hex nuts made of Steel, zinc-plated
- Washers made of Steel, zinc-plated
- Plastic spacers made of Polyamide (PA)

Scope of Delivery
- 1 mounting bracket
- 1 seal plate
- 7 socket cap screws M6 x 25 (ISO 4762)
- 7 plastic spacers 6,4 (DIN 125)
- 7 hex nuts M6 (ISO 4032)
- 7 washers 6,4 (DIN 9021)
- 6 sheet metal screws 4,8x13 (ISO 7049)

Installation
- Bolted to the side of the reservoir
- Bayonet flange of filler breather is placed on top
- Flange interface similar to DIN 24557, part 2 with 6 equally spaced mounting bores Ø4,5 mm / Ø.18 in (BCD Ø71±0,2 mm / Ø2.80±.01 in)

Order Codes

SMBB-ASMB	-	1
①		②

① Type

Side Mount Bracket	SMBB-ASMB

② Housing Material

Polyamide (PA)	1

Side Mount Bracket Type ASMB-2 (Aluminium Version)



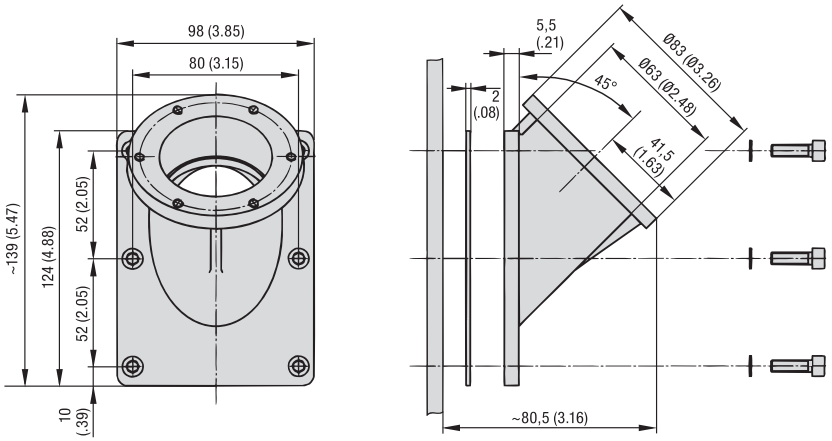

Characteristics

Lateral fastening of filler breathers with a six-hole flange connection similar to DIN 24557, part 2 to vertical or sloped walls of hydraulic reservoirs; ideal for applications in which space is limited

Suitability
- Suitable for Plastic Filler Breathers SPB-5 and SPBN (bayonet version) and Metal Filler Breathers SMBB-80

Materials
- Mounting bracket made of Aluminium
- Seal plate made of NBR (Buna-N®)
- Screws made of Steel, phosphated
- Washers made of gasket paper

Scope of Delivery
- 1 mounting bracket
- 1 seal plate
- 6 socket cap screws M6 x 20 (ISO 4762)
- 6 plastic spacers 6,4 (DIN 125)

Installation
- Bolted to the side of the reservoir
- Bayonet flange of filler breather is placed on top
- Flange interface similar to DIN 24557, part 2 with 6 equally spaced bores M5 (BCD Ø73±0,2 mm / Ø2.87±.01 in)

Order Codes

SMBB-ASMB	-	2
①		②

① Type

Side Mount Bracket	SMBB-ASMB

② Housing Material

Aluminium	2

Dimensional drawings: All dimensions in mm (in).

B

Extended Bayonet Flange
Type EBF

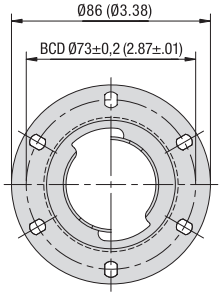

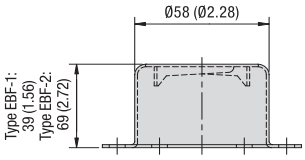



Order Codes

EBF - 2 - A

① ② ③

① Type

Extended Bayonet Flange	**EBF**

② Size

Total height of 39 mm (1.56 in)	**1**
Total height of 69 mm (2.72 in)	**2**

③ Anti-Splash Feature

Without anti-splash feature (standard option)	**-**
With anti-splash feature	**A**

Installation

- Six-hole bolt pattern for flange interfaces similar to DIN 24557, part 2:

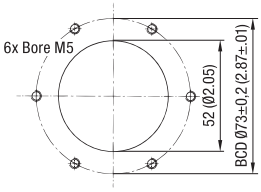

- Supplied without gaskets and bolts

Characteristics

Designed to raise filler breathers either 24 mm / .94 in or 54 mm / 2.12 in above the actual mounting surface of the reservoir to prevent contamination from blocking the filter element

Suitability

- Suitable for Metal Filler Breathers SMBB-80 and Plastic Filler Breathers SPBN (bayonet version)
- Replaces the existing bayonet flanges of these breathers

Materials

- Bayonet flange made of Steel, zinc-plated

Weld Riser
Type WR

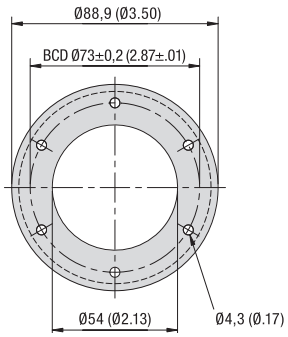

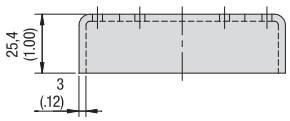



Order Codes

WR - 1

① ②

① Type

Weld Riser	**WR**

② Size

Total height of 25,4 mm (1.00 in)	**1**

Materials

- Weld riser made of Steel, untreated

Installation

- Welded to the top of the reservoir
- No requirement to drill and tap on the reservoir
- Bayonet flange of filler breather is placed on top

Characteristics

Designed to raise filler breathers 25,4 mm / 1.00 in above the actual mounting surface of the reservoir to prevent contamination from blocking the filter element whilst eliminating the requirement to drill and tap on the reservoir

Suitability

- Suitable for Metal Filler Breathers SMBB-80 as well as Plastic Filler Breathers SPB-5 and SPBN (bayonet version) and all components with a six-hole flange connection similar to DIN 24557, part 2

Dimensional drawings: All dimensions in mm (in).