DATASHEET - NZMN2-A200



Similar to illustration

Circuit-breaker, 3p, 200A

Part no.	**NZMN2-A200**
Catalog No.	**259093**
EL-Nummer (Norway)	**0004315538**

Powering Business Worldwide

Delivery program

Product range			Circuit-breaker
Protective function			System and cable protection
Standard/Approval			IEC
Installation type			Fixed
Release system			Thermomagnetic release
Construction size			NZM2
Number of poles			3 pole
Standard equipment			Screw connection
Switching capacity			
400/415 V 50 Hz	I_{cu}	kA	50
Rated current = rated uninterrupted current			
Rated current = rated uninterrupted current	$I_n = I_u$	A	200
Setting range			
Overload trip			
	I_r	A	160 - 200
Short-circuit releases 			
Non-delayed 	$I_i = I_n$ x …		6 - 10
Short-circuit releases 	I_{rm}	A	1200 - 2000

Technical data

General

Standards			IEC/EN 60947
Protection against direct contact			Finger and back of hand proof to VDE 0106 Part 100
Climatic proofing			Damp heat, constant, to IEC 60068-2-78 Damp heat, cyclic, to IEC 60068-2-30
Ambient temperature			
Ambient temperature, storage		°C	- 40 - + 70
Operation		°C	-25 - +70
Mechanical shock resistance (10 ms half-sinusoidal shock) according to IEC 60068-2-27		g	20 (half-sinusoidal shock 20 ms)
Safe isolation to EN 61140			
Between auxiliary contacts and main contacts		V AC	500
between the auxiliary contacts		V AC	300
Weight		kg	2.345
Mounting position			Vertical and 90° in all directions

			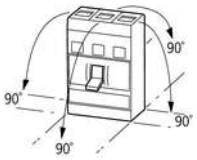 With XFI earth-fault release: - NZM1, N1, NZM2, N2: vertical and 90° in all directions with plug-in unit - NZM1, N1, NZM2, N2: vertical, 90° right/left with withdrawable unit: - NZM3, N3: vertical, 90° right/left - NZM4, N4: vertical with remote operator: - NZM2, N(S)2, NZM3, N(S)3, NZM4, N(S)4: vertical and 90° in all directions
Direction of incoming supply			as required
Degree of protection			
Device			In the operating controls area: IP20 (basic degree of protection)
Enclosures			With insulating surround: IP40 With door coupling rotary handle: IP66
Terminations			Tunnel terminal: IP10 Phase isolator and strip terminal: IP00
Other technical data (sheet catalogue)			Temperature dependency, Derating

Circuit-breakers

Rated current = rated uninterrupted current	$I_n = I_u$	A	200
Rated surge voltage invariability	U_{imp}		
Main contacts		V	8000
Auxiliary contacts		V	6000
Rated operational voltage	U_e	V AC	690
Rated operational voltage	U_e	V DC	750
			The following settings are required in order to ensure correct tripping: The fast-response release will take longer to respond when used for DC applications. Because of this, the setting on the trip block inscription, which is specified for AC currents, must be set to a lower value for DC currents. DC correction factor for instantaneous release response value: o NZM1: 1.25 o NZM2: 1.35 o NZM3: 1.45 Example: NZM3 Ie = 500A. Desired DC tripping current: 10 * Ie = 5000A. Calculation: • Desired DC value / correction factor = AC setting on trip block • 5000A / 1.45 = 3448 A ~ 7 * Ie = Value that needs to be set on the trip block Permitted circuit configurations: 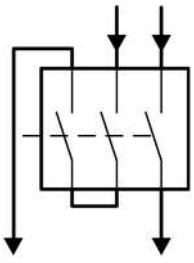 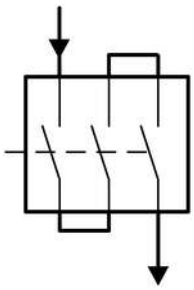
Overvoltage category/pollution degree			III/3
Rated insulation voltage	U_i	V	1000
Use in unearthed supply systems		V	≦ 690

Switching capacity

Rated short-circuit making capacity	I_{cm}		
240 V	I_{cm}	kA	187
400/415 V	I_{cm}	kA	105
440 V 50/60 Hz	I_{cm}	kA	74
525 V 50/60 Hz	I_{cm}	kA	53
690 V 50/60 H	Ic	kA	40
Rated short-circuit breaking capacity I_{cn}	I_{cn}		

Icu to IEC/EN 60947 test cycle O-t-CO	Icu	kA	
240 V 50/60 Hz	I_{cu}	kA	85
400/415 V 50/60 Hz	I_{cu}	kA	50
440 V 50/60 Hz	I_{cu}	kA	35
525 V 50/60 Hz	I_{cu}	kA	25
690 V 50/60 Hz	I_{cu}	kA	20
500 V DC	I_{cu}	kA	30
750 V DC	I_{cu}	kA	30
Ics to IEC/EN 60947 test cycle O-t-CO-t-CO	Ics	kA	
240 V 50/60 Hz	I_{cs}	kA	85
400/415 V 50/60 Hz	I_{cs}	kA	50
440 V 50/60 Hz	I_{cs}	kA	35
525 V 50/60 Hz	I_{cs}	kA	25
690 V 50/60 Hz	I_{cs}	kA	5
500 V DC	I_{cs}	kA	7.5
750 V DC	I_{cs}	kA	7.5
			Maximum back-up fuse, if the expected short-circuit currents at the installation location exceed the switching capacity of the circuit-breaker.
Rated short-time withstand current			
t = 0.3 s	I_{cw}	kA	1.9
t = 1 s	I_{cw}	kA	85
Utilization category to IEC/EN 60947-2			A
Lifespan, mechanical(of which max. 50 % trip by shunt/undervoltage release)	Operations		20000
Lifespan, electrical			
AC-1			
400 V 50/60 Hz	Operations		10000
415 V 50/60 Hz	Operations		10000
690 V 50/60 Hz	Operations		7500
AC--3			
400 V 50/60 Hz	Operations		6500
415 V 50/60 Hz	Operations		6500
690 V 50/60 Hz	Operations		5000
DC-1			
500 V DC	Operations		7500
750 V DC	Operations		7500
DC - 3			
500 V DC	Operations		3000
750 V DC	Operations		3000
Max. operating frequency		Ops/h	120
Total break time at short-circuit		ms	< 10

Terminal capacity

Standard equipment			Screw connection
Optional accessories			Box terminal Tunnel terminal connection on rear
Round copper conductor			
Box terminal			
Solid		mm^2	1 x (10 - 16) 2 x (6 - 16)
Stranded		mm^2	1 x (25 - 185) 2 x (25 - 70)
Tunnel terminal			
Solid		mm^2	1 x 16
Stranded			
1-hole		mm^2	1 x (25 - 185)
Bolt terminal and rear-side connection			

Direct on the switch			
Solid		mm^2	1 x (10 - 16) 2 x (6 - 16)
Stranded		mm^2	1 x (25 - 185) 2 x (25 - 70)
Al circular conductor			
Tunnel terminal			
Solid		mm^2	1 x 16
Stranded			
Stranded		mm^2	1 x (25 - 185)
Bolt terminal and rear-side connection			
Direct on the switch			
Solid		mm^2	1 x (10 - 16) 2 x (10 - 16)
Stranded		mm^2	1 x (25 - 50) 2 x (25 - 50)
Cu strip (number of segments x width x segment thickness)			
Box terminal			
	min.	mm	2 x 9 x 0.8
	max.	mm	10 x 16 x 0.8 (2x) 8 x 15.5 x 0,8
Bolt terminal and rear-side connection			
Flat copper strip, with holes	min.	mm	2 x 16 x 0.8
Flat copper strip, with holes	max.	mm	10 x 24 x 0.8
Copper busbar (width x thickness)	mm		
Bolt terminal and rear-side connection			
Screw connection			M8
Direct on the switch			
	min.	mm	16 x 5
	max.	mm	24 x 8
Control cables			
		mm^2	1 x (0.75 - 2.5) 2 x (0.75 - 1.5)

Design verification as per IEC/EN 61439

Technical data for design verification			
Rated operational current for specified heat dissipation	I_n	A	200
Equipment heat dissipation, current-dependent	P_{vid}	W	48
Operating ambient temperature min.		°C	-25
Operating ambient temperature max.		°C	70
IEC/EN 61439 design verification			
10.2 Strength of materials and parts			
10.2.2 Corrosion resistance			Meets the product standard's requirements.
10.2.3.1 Verification of thermal stability of enclosures			Meets the product standard's requirements.
10.2.3.2 Verification of resistance of insulating materials to normal heat			Meets the product standard's requirements.
10.2.3.3 Verification of resistance of insulating materials to abnormal heat and fire due to internal electric effects			Meets the product standard's requirements.
10.2.4 Resistance to ultra-violet (UV) radiation			Meets the product standard's requirements.
10.2.5 Lifting			Does not apply, since the entire switchgear needs to be evaluated.
10.2.6 Mechanical impact			Does not apply, since the entire switchgear needs to be evaluated.
10.2.7 Inscriptions			Meets the product standard's requirements.
10.3 Degree of protection of ASSEMBLIES			Does not apply, since the entire switchgear needs to be evaluated.
10.4 Clearances and creepage distances			Meets the product standard's requirements.
10.5 Protection against electric shock			Does not apply, since the entire switchgear needs to be evaluated.
10.6 Incorporation of switching devices and components			Does not apply, since the entire switchgear needs to be evaluated.
10.7 Internal electrical circuits and connections			Is the panel builder's responsibility.
10.8 Connections for external conductors			Is the panel builder's responsibility.
10.9 Insulation properties			

10.9.2 Power-frequency electric strength			Is the panel builder's responsibility.
10.9.3 Impulse withstand voltage			Is the panel builder's responsibility.
10.9.4 Testing of enclosures made of insulating material			Is the panel builder's responsibility.
10.10 Temperature rise			The panel builder is responsible for the temperature rise calculation. Eaton will provide heat dissipation data for the devices.
10.11 Short-circuit rating			Is the panel builder's responsibility. The specifications for the switchgear must be observed.
10.12 Electromagnetic compatibility			Is the panel builder's responsibility. The specifications for the switchgear must be observed.
10.13 Mechanical function			The device meets the requirements, provided the information in the instruction leaflet (IL) is observed.

Technical data ETIM 7.0

Low-voltage industrial components (EG000017) / Power circuit-breaker for trafo/generator/installation protection (EC000228)

Electric engineering, automation, process control engineering / Low-voltage switch technology / Circuit breaker (LV < 1 kV) / Circuit breaker for power transformer, generator and system protection (ecl@ss10.0.1-27-37-04-09 [AJZ716013])

Rated permanent current Iu		A	200
Rated voltage		V	690 - 690
Rated short-circuit breaking capacity Icu at 400 V, 50 Hz		kA	50
Overload release current setting		A	160 - 200
Adjustment range short-term delayed short-circuit release		A	0 - 0
Adjustment range undelayed short-circuit release		A	1200 - 2000
Integrated earth fault protection			No
Type of electrical connection of main circuit			Screw connection
Device construction			Built-in device fixed built-in technique
Suitable for DIN rail (top hat rail) mounting			No
DIN rail (top hat rail) mounting optional			Yes
Number of auxiliary contacts as normally closed contact			0
Number of auxiliary contacts as normally open contact			0
Number of auxiliary contacts as change-over contact			0
With switched-off indicator			No
With under voltage release			No
Number of poles			3
Position of connection for main current circuit			Front side
Type of control element			Rocker lever
Complete device with protection unit			Yes
Motor drive integrated			No
Motor drive optional			Yes
Degree of protection (IP)			IP20

Characteristics

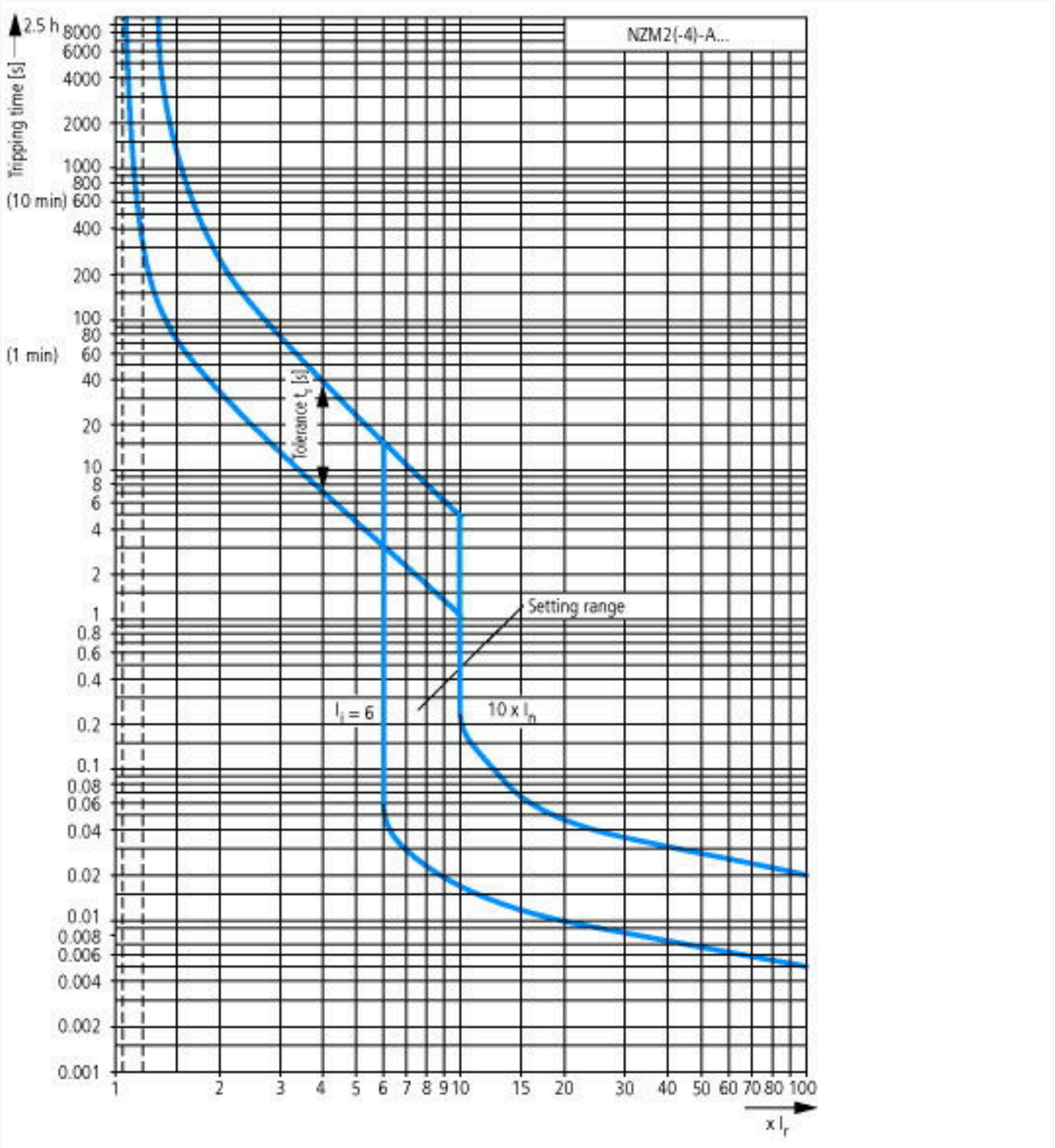

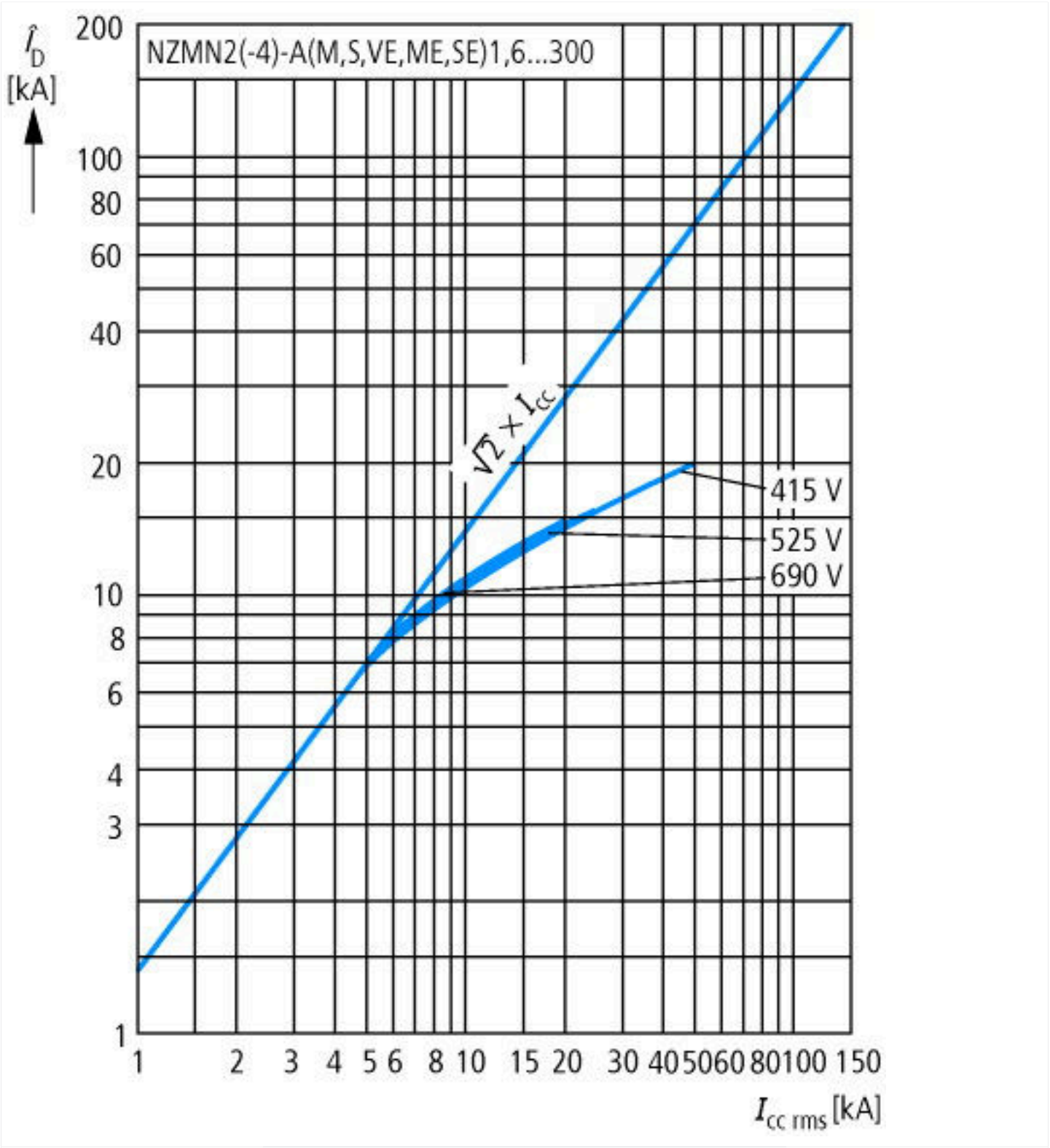

Let-through current

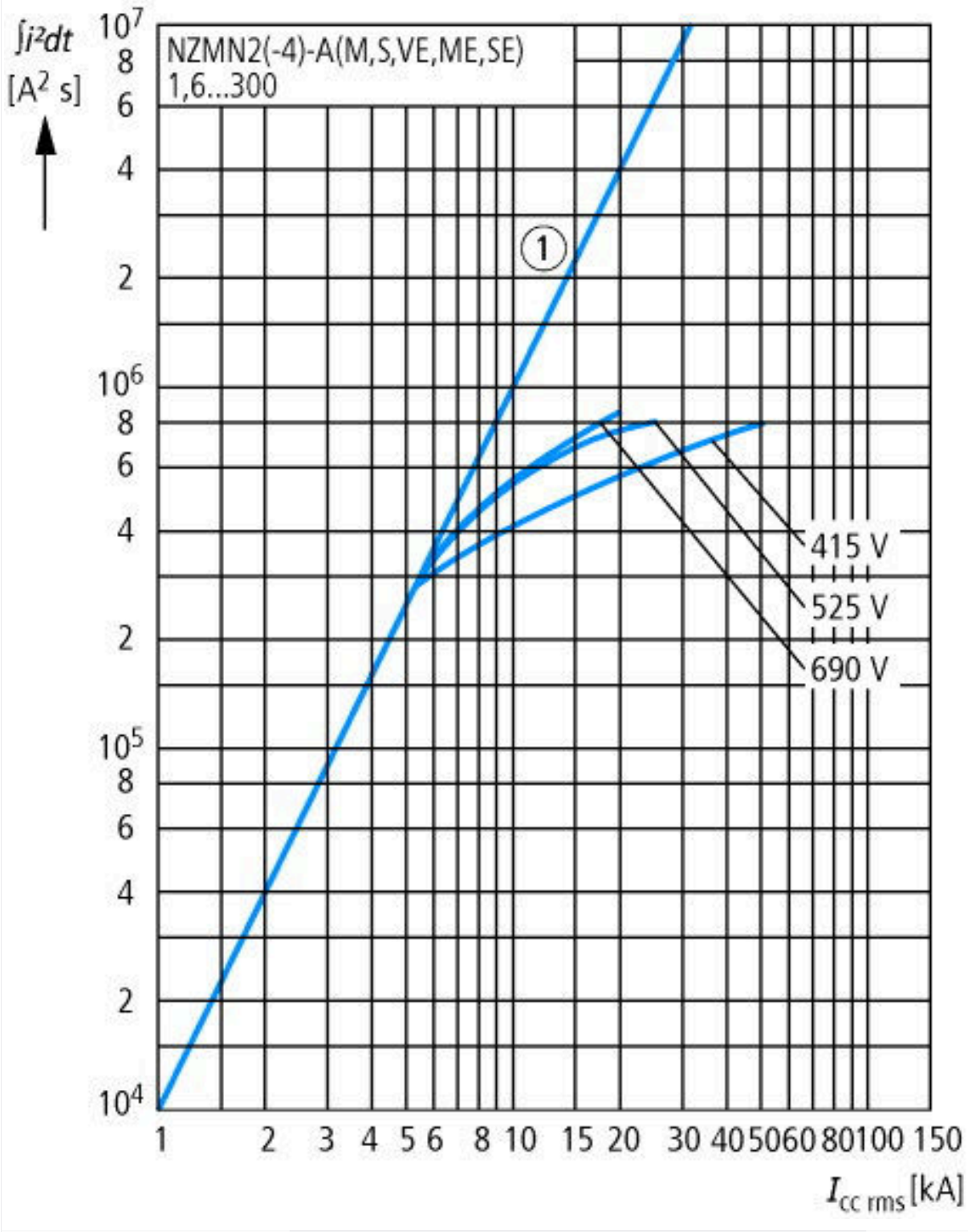

Let-through energy

Dimensions

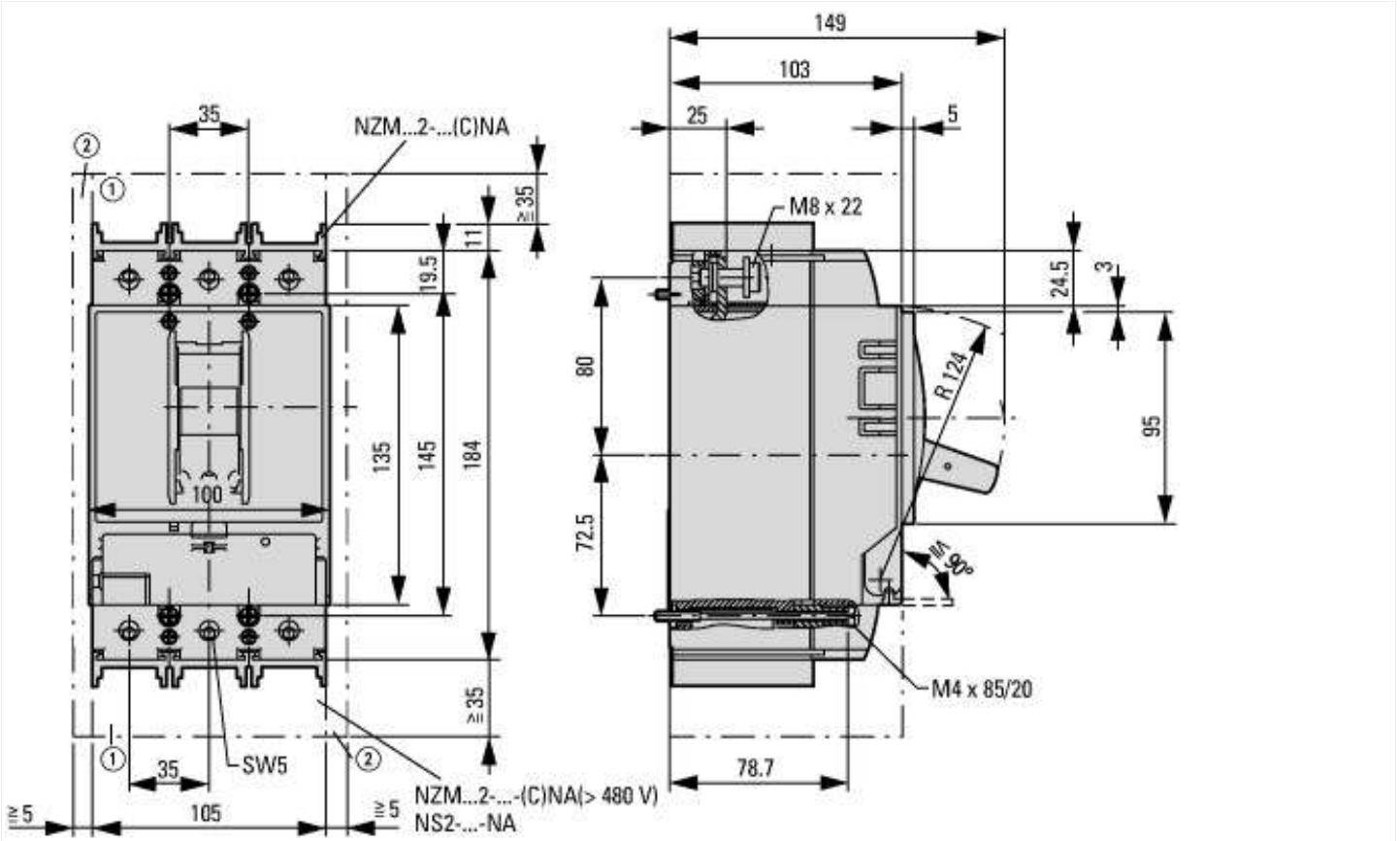

① Blow out area, minimum clearance to adjacent parts
② Minimum clearance to adjacent parts

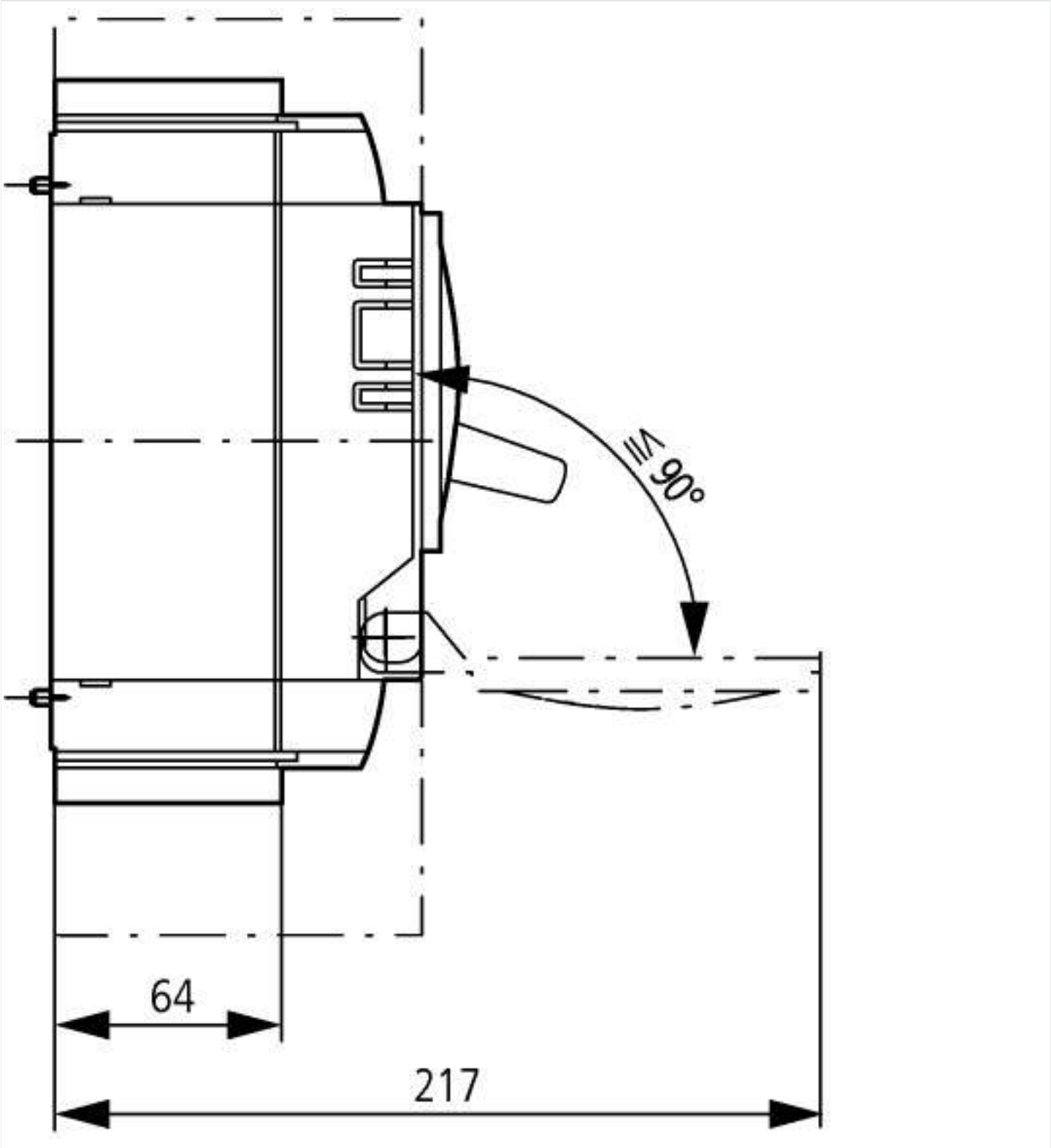

© 10/2019 by Eaton Industries GmbH