MATERIAL NO.	ENGINEERING NO.	FINISHED LENGTH
1300068164	105000B35M020	6'7" +3.50"-0 (2M +88.9mm-0)
1300068165	105000B35M050	16'5" +6.50"-0 (5M +165.1mm-0)
1300068166	105000B35M100	32'10" +12.50"-0 (10M +317.5mm-0)
1300068167	105000B35M200	65'7" +24.50"-0 (20M +622.3mm-0)
1300068168	105000B35M300	98'5" +24.50"-0 (30M +622.3mm-0)

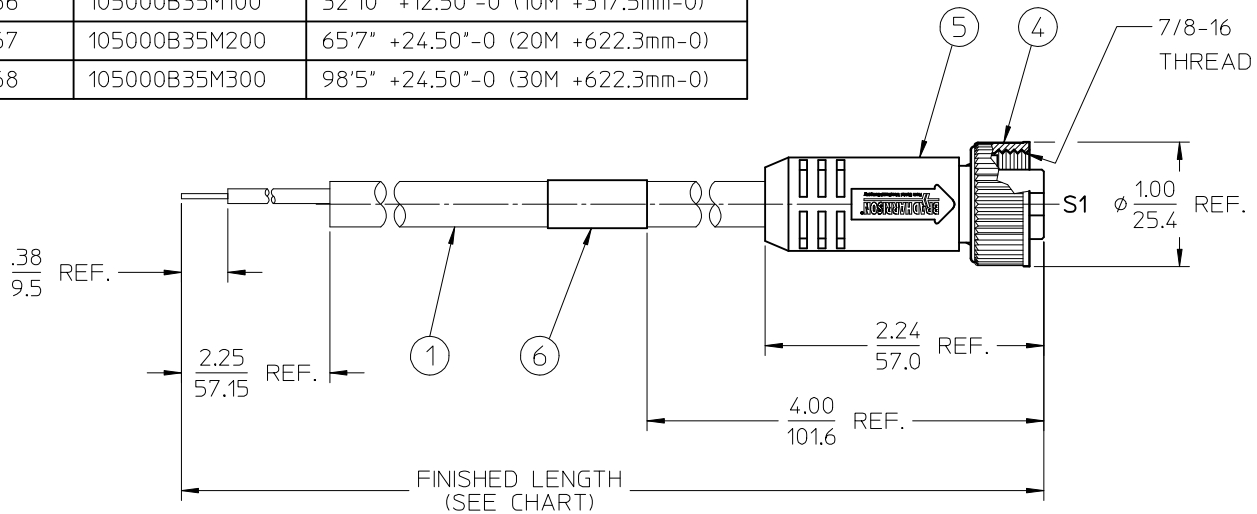

FEMALE FACE VIEW
SCALE 2X

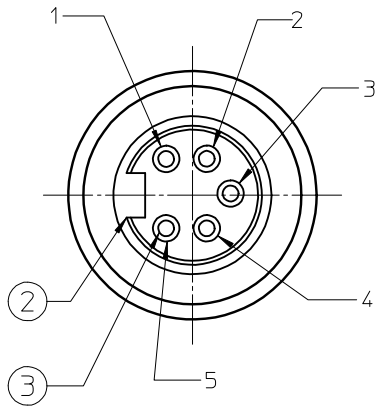

NOTES:
1. MATERIAL: SEE TABLE
2. FINISHES: SEE TABLE
3. ELECTRICAL SPECIFICATIONS
   VOLTAGE RATING: 300V AC/DC
   CURRENT RATING: 8 AMPS
4. PROTECTION: IP67
5. ASSEMBLY IS RoHS COMPLIANT
   BY EXEMPTION

CABLE P/N MATRIX

105000B35M010

- SINGLE ENDED CORDSET (A-SIZE)
- NUMBER OF POLES
- CONNECTOR TYPE (FEMALE INT. THD.)
- CABLE TYPE (16 AWG TPU)
- FINISHED LENGTH (1M SHOWN)

S1

1	BLACK
2	BLUE
3	GREEN/YELLOW
4	BROWN
5	WHITE

WIRING DIAGRAM

ITEM	QTY.	DESCRIPTION	MATERIAL	FINISH
6	1	WRAP LABEL	MYLAR	BLACK/YELLOW
5	1	OVERMOLD	PUR	BLACK
4	1	COUPLING RING-INT THREAD	ZINC DIE-CAST	BLACK
3	5	CONTACT SOCKET	Cu ALLOY	GOLD PLATED
2	1	INSERT, 5P	PUR	BLACK
1	A/R	CABLE 5/C, 1.5mm² (16 AWG)	TPU JACKET	GRAY

RELEASED
EC NO: IPG2014-1030 2013/12/09
DRWN:RSTONE 2013/12/20
CHKD:K. JOZWIK 2013/12/16
APPR:JFMURPHY
DESCRIPTION
A
REV

QUALITY SYMBOLS
▼=0
Ⓔ=0

GENERAL TOLERANCES (UNLESS SPECIFIED)

	mm	INCH
4 PLACES	± ---	± ---
3 PLACES	± ---	± ---
2 PLACES	± ---	± .01
1 PLACE	± 0.3	± ---
0 PLACE	± ---	± ---

ANGULAR ± 2 °
DRAFT WHERE APPLICABLE MUST REMAIN WITHIN DIMENSIONS

DIMENSION STYLE: IN/MM
SCALE: 1:1
DESIGN UNITS: INCH
THIRD ANGLE PROJECTION

DRAWN BY: RSTONE DATE: 2013/12/09
CHECKED BY: K. JOZWIK DATE: 2013/12/20
APPROVED BY: JFMURPHY DATE: 2013/12/16
MATERIAL NO.: SEE CHART

TITLE: MINI-CHANGE CABLE ASSY 5P FP STRAIGHT 16 AWG TPU

molex

DOCUMENT NO.: SD-130006-049
SHEET NO.: 1 OF 1
SIZE: B

THIS DRAWING CONTAINS INFORMATION THAT IS PROPRIETARY TO MOLEX INCORPORATED AND SHOULD NOT BE USED WITHOUT WRITTEN PERMISSION

MATERIAL NO.	ENGINEERING NO.	FINISHED LENGTH
1300068164	105000B35M020	6'7" +3.50"-0 (2M +88.9mm-0)
1300068165	105000B35M050	16'5" +6.50"-0 (5M +165.1mm-0)
1300068166	105000B35M100	32'10" +12.50"-0 (10M +317.5mm-0)
1300068167	105000B35M200	65'7" +24.50"-0 (20M +622.3mm-0)
1300068168	105000B35M300	98'5" +24.50"-0 (30M +622.3mm-0)

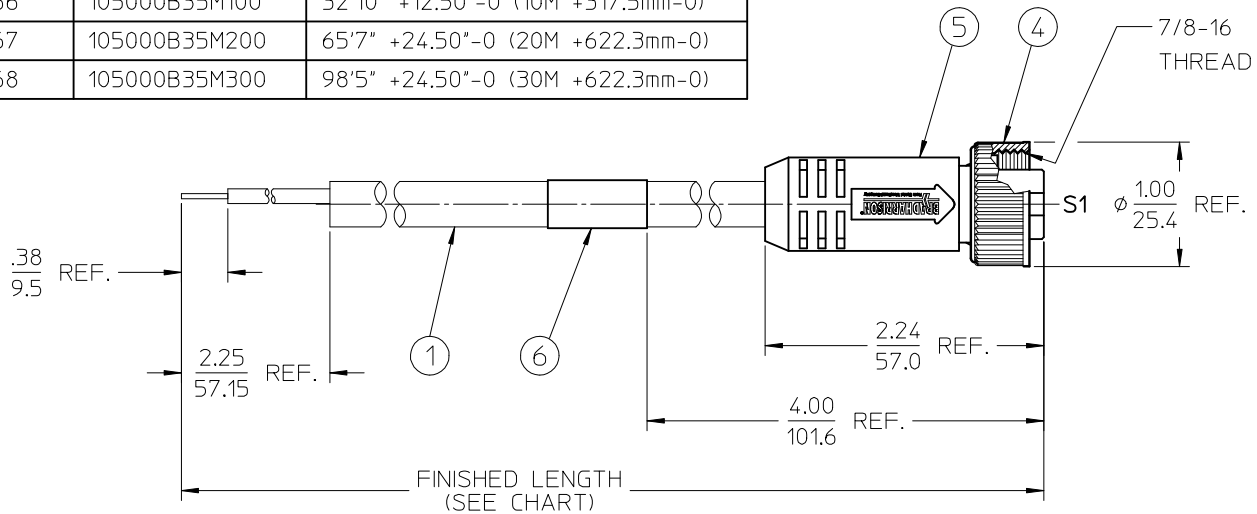

FEMALE FACE VIEW
SCALE 2X

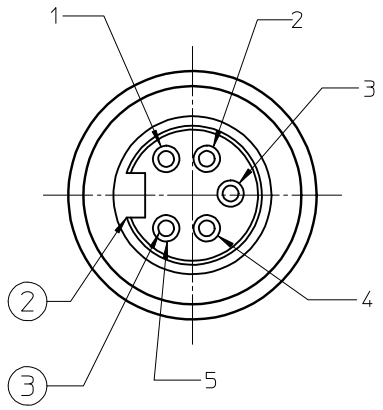

NOTES:
1. MATERIAL: SEE TABLE
2. FINISHES: SEE TABLE
3. ELECTRICAL SPECIFICATIONS
   VOLTAGE RATING: 300V AC/DC
   CURRENT RATING: 8 AMPS
4. PROTECTION: IP67
5. ASSEMBLY IS RoHS COMPLIANT
   BY EXEMPTION

CABLE P/N MATRIX

105000B35M010

- SINGLE ENDED CORDSET (A-SIZE)
- NUMBER OF POLES
- CONNECTOR TYPE (FEMALE INT. THD.)
- CABLE TYPE (16 AWG TPU)
- FINISHED LENGTH (1M SHOWN)

S1

1	BLACK
2	BLUE
3	GREEN/YELLOW
4	BROWN
5	WHITE

WIRING DIAGRAM

ITEM	QTY.	DESCRIPTION	MATERIAL	FINISH
6	1	WRAP LABEL	MYLAR	BLACK/YELLOW
5	1	OVERMOLD	PUR	BLACK
4	1	COUPLING RING-INT THREAD	ZINC DIE-CAST	BLACK
3	5	CONTACT SOCKET	Cu ALLOY	GOLD PLATED
2	1	INSERT, 5P	PUR	BLACK
1	A/R	CABLE 5/C, 1.5mm² (16 AWG)	TPU JACKET	GRAY

RELEASED
EC NO: IPG2014-1030 2013/12/09
DRWN:RSTONE 2013/12/20
CHKD:K. JOZWIK 2013/12/16
APPR:JFMURPHY
DESCRIPTION
A
REV

QUALITY SYMBOLS
▼=0
Ⓔ=0

GENERAL TOLERANCES (UNLESS SPECIFIED)

	mm	INCH
4 PLACES	± ---	± ---
3 PLACES	± ---	± ---
2 PLACES	± ---	± .01
1 PLACE	± 0.3	± ---
0 PLACE	± ---	± ---

ANGULAR ± 2 °
DRAFT WHERE APPLICABLE MUST REMAIN WITHIN DIMENSIONS

DIMENSION STYLE: IN/MM
SCALE: 1:1
DESIGN UNITS: INCH
THIRD ANGLE PROJECTION

DRAWN BY: RSTONE DATE: 2013/12/09
CHECKED BY: K. JOZWIK DATE: 2013/12/20
APPROVED BY: JFMURPHY DATE: 2013/12/16
MATERIAL NO.: SEE CHART

TITLE: MINI-CHANGE CABLE ASSY 5P FP STRAIGHT 16 AWG TPU

molex

DOCUMENT NO.: SD-130006-049
SHEET NO.: 1 OF 1
SIZE: B

THIS DRAWING CONTAINS INFORMATION THAT IS PROPRIETARY TO MOLEX INCORPORATED AND SHOULD NOT BE USED WITHOUT WRITTEN PERMISSION