PG2896

Flush pressure sensor with analogue display

PG-2,5-REA01-MFRKG/US/ /P

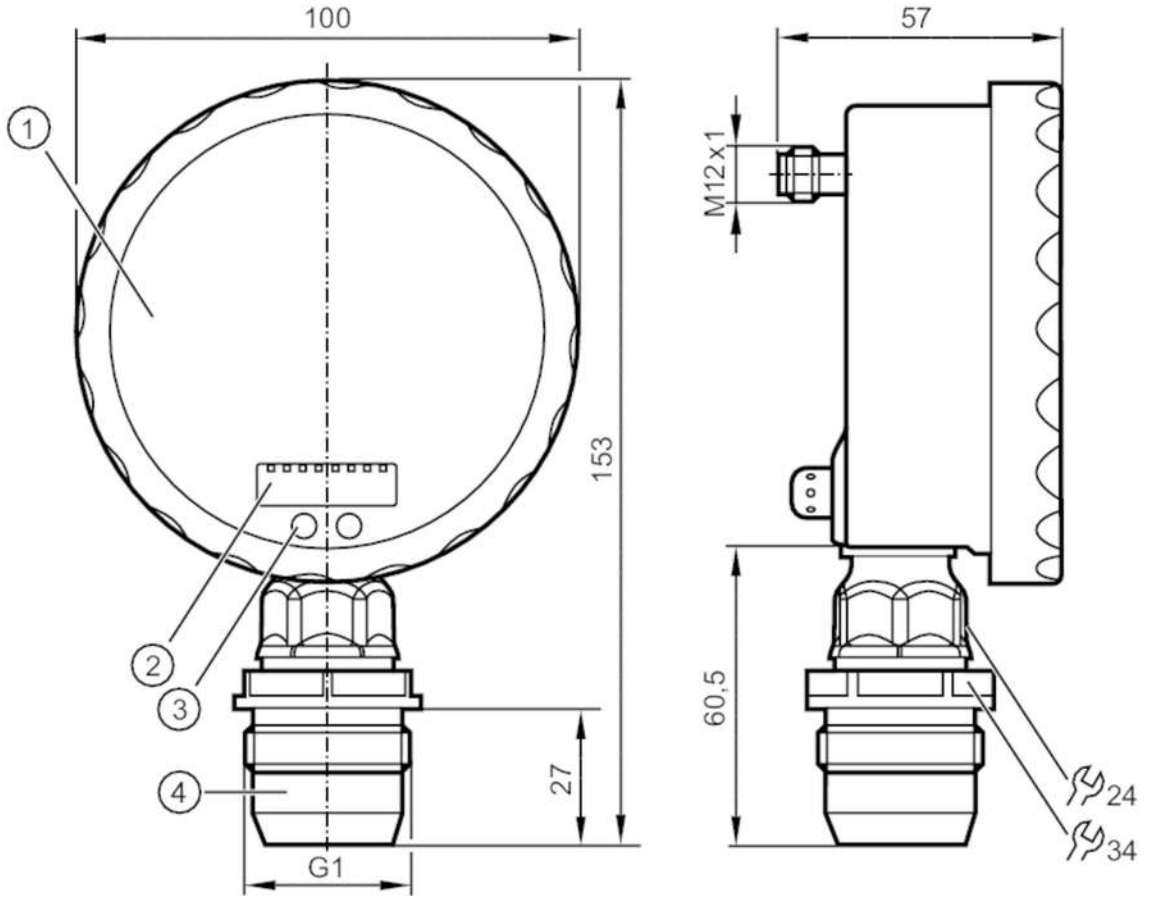

1 analogue display
2 alphanumeric display 4-digit
3 sensor field (programming button)
4 G 1 sealing cone external thread
Attention: The unit must only be installed in a process connection for G1 sealing cone. The G1A sealing cone of the unit is only suited for adapters with metal end stop.

ACS CE CRN cULus LISTED EC 1935/2004 EHEDG Tested FCM FDA S UKCA

Product characteristics			
Number of inputs and outputs	Number of digital outputs: 1; Number of analogue outputs: 1		
Measuring range	-0.124...2.5 bar	-124...2500 mbar	-1.8...36.27 psi
Process connection	threaded connection G 1 external thread sealing cone Attention: The unit must only be installed in a process connection for G1 sealing cone.; The G1A sealing cone of the unit is only suited for adapters with metal end stop.		

Application			
Special feature	Gold-plated contacts		
Application	flush mountable for the food and beverage industry		
Media	viscous media and liquids with suspended particles; liquids and gases		
Medium temperature [°C]	-25...125; (145 max. 1h)		
Min. bursting pressure	50 bar	725 psi	5 MPa
Pressure rating	20 bar	290 psi	2 MPa
Type of pressure	relative pressure		

PG2896

Flush pressure sensor with analogue display

PG-2,5-REA01-MFRKG/US/ /P

MAWP (for applications according to CRN)	[bar]	20		
Electrical data				
Operating voltage	[V]	18...32 DC		
Current consumption	[mA]	< 70; (24 V)		
Min. insulation resistance	[MΩ]	100; (500 V DC)		
Protection class		III		
Reverse polarity protection		yes		
Power-on delay time	[s]	6		
Measuring principle		hydrostatic		
Integrated watchdog		yes		
Inputs / outputs				
Number of inputs and outputs		Number of digital outputs: 1; Number of analogue outputs: 1		
Outputs				
Total number of outputs		2		
Output signal		switching signal; analogue signal; (configurable)		
Electrical design		PNP/NPN		
Number of digital outputs		1		
Output function		normally open / normally closed; (parameterisable)		
Max. voltage drop switching output DC	[V]	2		
Permanent current rating of switching output DC	[mA]	250		
Switching frequency DC	[Hz]	50		
Number of analogue outputs		1		
Analogue current output	[mA]	4...20, invertible; (scalable)		
Max. load	[Ω]	(Ub - 10 V) / 20 mA		
Short-circuit protection		yes		
Type of short-circuit protection		pulsed		
Overload protection		yes		
Measuring/setting range				
Measuring range		-0.124...2.5 bar	-124...2500 mbar	-1.8...36.27 psi
Set point SP		-0.12...4 bar		-1.74...58.02 psi
Reset point rP		-0.124...3.996 bar		-1.8...57.96 psi
Analogue start point		-0.124...3.37 bar		-1.8...48.87 psi
Analogue end point		0.5...4 bar		7.26...58.02 psi
In steps of		0.002 bar		0.03 psi
Accuracy / deviations				
Switch point accuracy	[% of the span]	< ± 0,2; (Turn down 1:1)		
Repeatability	[% of the span]	< ± 0,1; (with temperature fluctuations < 10 K; Turn down 1:1)		
Characteristics deviation	[% of the span]	< ± 0,2; (Turn down 1:1 , linearity, incl. hysteresis and repeatability , limit value setting to DIN EN IEC 62828-1)		
Linearity deviation	[% of the span]	< ± 0,15; (Turn down 1:1)		

PG2896

Flush pressure sensor with analogue display

PG-2,5-REA01-MFRKG/US/ /P

Hysteresis deviation [% of the span]		< ± 0,15; (Turn down 1:1)
Long-term stability [% of the span]		< ± 0,1; (Turn down 1:1; per year)
Temperature coefficient zero point [% of the span / 10 K]		< ± 0,05; (0...70 °C)
Temperature coefficient span [% of the span / 10 K]		< ± 0,15; (0...70 °C)
Response times		
Response time [ms]		< 10
Damping process value dAP [s]		0.01...30
Damping for the analogue output dAA [s]		0.01...30
Step response time analogue output [ms]		25
Operating conditions		
Ambient temperature [°C]		-25...80
Storage temperature [°C]		-40...100
Protection		IP 67; IP 69K
Tests / approvals		
EMC	EN 61000-4-2 ESD	4 kV CD / 8 kV AD
	EN 61000-4-3 HF radiated	10 V/m
	EN 61000-4-4 Burst	2 kV
	EN 61000-4-5 Surge	0,5/1 kV
	EN 61000-4-6 HF conducted	10 V
Shock resistance	DIN IEC 68-2-27	50 g (11 ms)
Vibration resistance	DIN IEC 68-2-6	20 g (10...2000 Hz)
MTTF [years]		100
Note on approval		factory certificate available as download at www.factory-certificate.ifm
Mechanical data		
Weight [g]		532
Dimensions [mm]		153 x 100 x 57
Materials		stainless steel (316L/1.4404); PA; FKM; PTFE; viewing glass: laminated safety glass 4 mm
Materials (wetted parts)		ceramics (99.9 % Al2O3); stainless steel (316L/1.4435); surface characteristics: Ra < 0,4 / Rz 4; PTFE
Min. pressure cycles		100 million
Process connection		threaded connection G 1 external thread sealing cone Attention: The unit must only be installed in a process connection for G1 sealing cone.; The G1A sealing cone of the unit is only suited for adapters with metal end stop.
Displays / operating elements		
Display	Display unit	2 x LED, green
	switching status	LED, yellow
	switch points	LED ring, red
	function display	alphanumeric display, red 4-digit
	measured values	analogue display, 0...350° rotatable, pointer not visible when unit disconnected
	measured values	alphanumeric display, red 4-digit

PG2896

Flush pressure sensor with analogue display

PG-2,5-REA01-MFRKG/US/ /P

With scale	yes	
Extended display range (max.)	4 bar	58.02 psi

Remarks

Remarks	characteristics deviation in the extended display range: 1.5 % of the span
	switch point accuracy in the extended display range: 1.5 % of the span
Pack quantity	1 pcs.

Electrical connection

Connector: 1 x M12; coding: A; Contacts: gold-plated



Connection

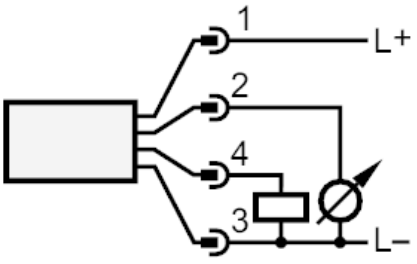

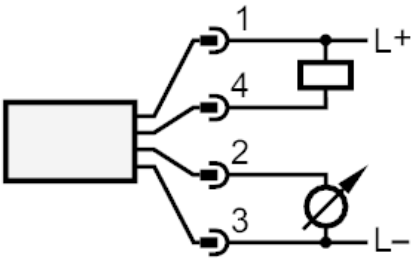

OUT1	switching output
OUT2	analogue output