MSUD FORM C 8MM

PUR 3X0.75 GRAY, 5m

MSUD
Form C (8 mm)
24 V AC ±20% / DC ±25%
LED and suppression

Further cable lengths on request. Plastic housings with good resistance against chemicals and oils. The resistance to aggressive media should be individually tested for your application. Further details on request.

Link to Product

Illustration

The information in this brochure has been compiled with the utmost care.
Liability for the correctness completeness and topicality of the information is restricted to gross negligence. Version: 01/20

stay connected

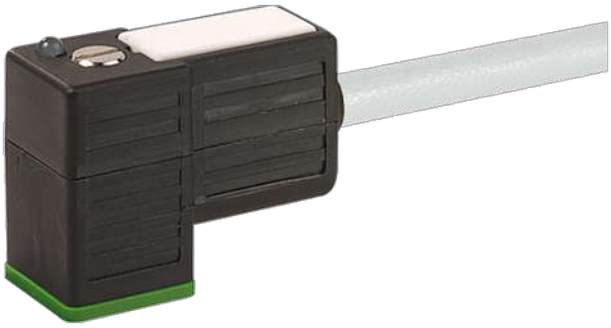

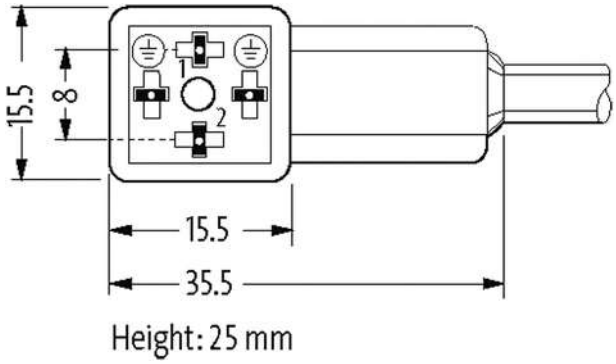

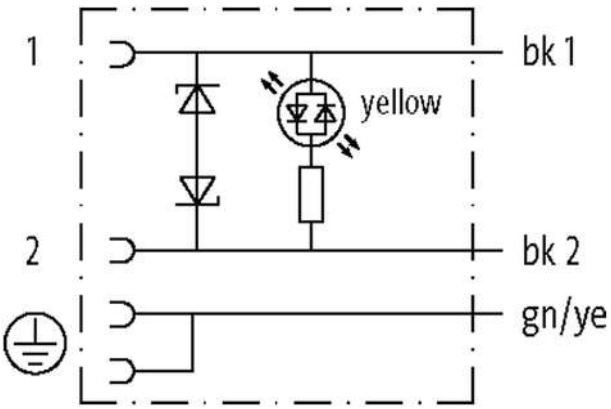

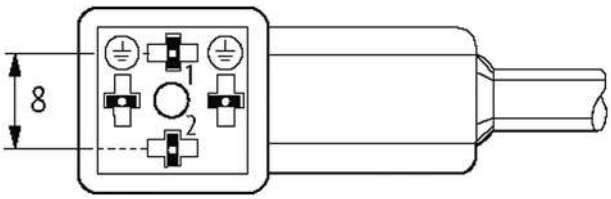

Product may differ from Image

Approvals

cCSAus	* only for products with UL/CSA approved cable

Form

Form	80021

Cables

No./diameter of wires	3× 0.75 mm²
Wire isolation	PVC (bk num, gnye)
C-track properties	2 Mio.

The information in this brochure has been compiled with the utmost care.
Liability for the correctness completeness and topicality of the information is restricted to gross negligence. Version: 01/20

Material (jacket)	PUR/PVC (UL/CSA)
Outer Ø	5.9 mm ±5%
Bend radius (moving)	15× outer Ø
Temperature range (fixed)	-30...+80 °C
Temperature range (mobile)	-5...+80 °C
Cable identification	226
Cable Type	2 (PUR/PVC)
Approval (cable)	UL (AWM-Style 20549/1731), CSA; CE conform
Cable weight [g/m]	55,33
Material (wire)	Cu wire, bare
Resistor (core)	max. 26 Ω/km (20 °C)
Single wire Ø (core)	0.15 mm
Construction (core)	42× 0.15 mm (multi-strand wire class 6)
Diameter (core)	3× 0.75 mm²
AWG	similar to AWG 18
Material (wire isolation)	PVC
Material property (wire isolation)	CFC-, cadmium-, silicone- and lead-free
Shore hardness (wire isolation)	43 ±5 D
Wire-Ø incl. isolation	1.8 mm ±5%
Color/numbering of wires	bk numbered, gnye longitudinally striped
Stranding combination	3 wires twisted
Shield	no
Material (jacket)	PUR/PVC
Material property (jacket)	CFC-, halogen-, cadmium-, silicone- and lead-free, matt, low-adhesion, machine easy to process, abrasion-resistant, hydrolysis and microbial resistant
Shore hardness (jacket)	80 ±5 A (PVC-under jacket); 85 ±5 A (PUR-jacket)
Outer-Ø (jacket)	5.9 mm ±5%
Color (jacket)	gray
chemical resistance	good resistance to oil, gasoline and chemicals
Nominal voltage	UL 300 V AC
Test voltage	2000 V AC
Current load capacity	to DIN VDE 0298-4
Temperature range (fixed)	-30...+80 °C
Temperature range (mobile)	-5...+80 °C
Bend radius (fixed)	10× outer Ø
Bend radius (moving)	15× outer Ø
No. of bending cycles (C-track)	max. 2 Mio. (25 °C)
Traversing distance (C-track)	max. 5 m (horizontal)
Travel speed (C-track)	max. 3.3 m/s
Acceleration (C-track)	max. 5 m/s²
Jacket Color	gray

Technical Data	
Operating voltage	24 V AC ±20% / DC ±25%
Operating current per contact	max. 4 A
Switch off peak	max. 55 V
Switch off delay time	max. 20 ms
Locking of ports	M2.5 (recommended torque 0.4 Nm)
Housing	Black plastic (gray on request)
Protection	IP67 inserted and tightened (EN 60529)

General data

The information in this brochure has been compiled with the utmost care.
Liability for the correctness completeness and topicality of the information is restricted to gross negligence. Version: 01/20

Temperature range	-25...+85 °C, depending on cable quality

Commercial data	
country of origin	CZ
customs tariff number	85444290
EAN	4048879133746
eClass	27279218
Packaging unit	1

The information in this brochure has been compiled with the utmost care.
Liability for the correctness completeness and topicality of the information is restricted to gross negligence. Version: 01/20