Your Expert Partner for **Human Machine Interfaces**

Actuator

Distribution by
Rs-online

14-
271.0252



https://rs-online.eao.com/component/14-271.02...

Your product:



14-271.0252
Actuator

FRONT

Front form: Round

MOUNTING

Mounting type: Panel mounting

OPERATING-/INDICATION PART

Lens illumination: Illuminated

ELECTRICAL CHARACTERISTICS

Switching voltage and switching current:
250 VAC, 5 A (ohmic)
250 VAC, 3 A (Soldering terminal)
250 VAC, 2 A (inductive, cos(phi) = 0.7)
220 VDC, 0.1 A (inductive, L:R = 30 ms)
110 VDC, 0.2 A (inductive, L:R = 30 ms)
60 VDC, 0.7 A (inductive, L:R = 30 ms)
24 VDC, 2 A (inductive, L:R = 30 ms)

Contacts: 1 NC / 1 NO

Rated Operational Voltage Ue: 250 VAC/DC according to EN IEC 61058-1

Switching rating: 250 V @ 3 A

Electrical lifetime: 50 000 cycles of operation

Electric strength: 3000 VAC, 50 Hz, 1 min. between all terminals and earth, according to EN/IEC 61058-1

Protection class: II

Standards: According to EN/IEC 61058-1

Thermal current Ith: The maximum current in continuous operation and at ambient temperature not exceeding the quoted maximum values.
3 A

MECHANICAL CHARACTERISTICS

Terminal:	Soldering terminal
Contact material:	Gold
Switching action:	Maintained
Switching system:	Snap-action switching element
Switching system:	Self-cleaning, double-break snap action switching system, 1 normally closed and 1 normally open contact per element.
Mechanical lifetime:	1 Mil. cycles of operation (RCC/RPB)
Operating force:	5 N ... 8 N, depending on the number of switching elements
Operating Travel:	3 mm
Tightening torque:	Fixing nut max. 0.25 Nm
Weight:	0.015 kg

AMBIENT CONDITION

IP front protection:	IP67, according to DIN EN 60529
Operating temperature:	– 25 °C ... + 55 °C, mounted as a block, make sure the heat can escape freely
Storage temperature:	– 40 °C ... + 85 °C
Shock resistance:	Max. 150 m / s^2, pulse width 11 ms, 3-axis, (semi-sinusoidal as per EN IEC 60068-2-27)
Vibration resistance:	Max. 100 m / s^2 from 10 Hz ... 500 Hz, (sinusoidal EN IEC 60068-2-6)
Climate resistance:	Standard condition, as per DIN EN 60068-2-78 Standard cyclic, as per DIN IEC 60068-2-30

CERTIFICATE

Approbations:	CB (IEC 61058-1), CQC, CSA, DNV, EAC, ENEC (EN 61058-1), UL, VDE
Conformities:	CE, UKCA, 2011 / 65 / EC (RoHS), 2014 / 35 / EU (LVD)
REACH:	REACH compliant
RoHS:	RoHS compliant

OTHER

Short Description:	Actuator, Illuminated, Round, 1 NC / 1 NO, Maintained, Soldering terminal, IP67, according to DIN EN 60529
Housing colour:	Black

max. number of switching elements: 4

Wiring diagrams:

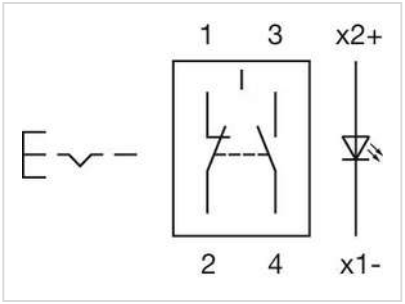

Mounting cut-outs:

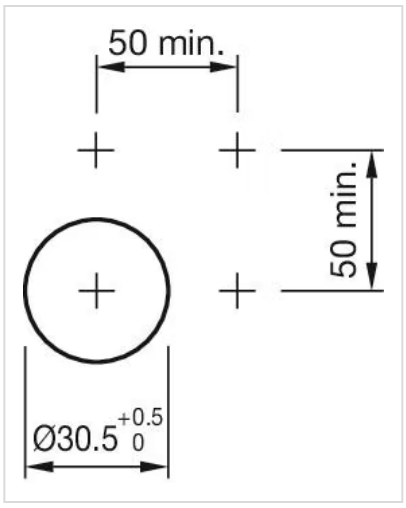
50 min.
50 min.
Ø30.5 +0.5 0

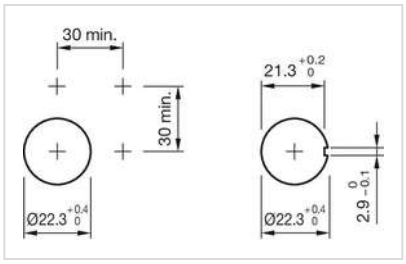
30 min.
30 min.
Ø22.3 +0.4 0
21.3 +0.2 0
2.9 0 -0.1
Ø22.3 +0.4 0

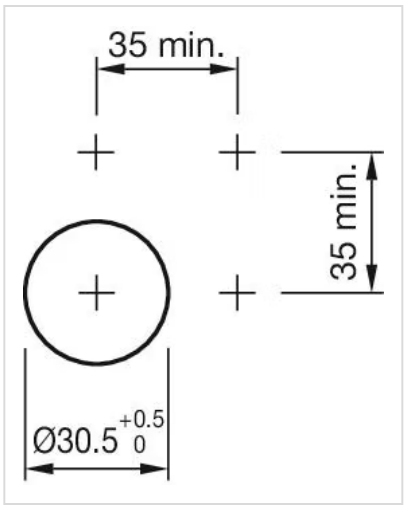
35 min.
35 min.
Ø30.5 +0.5 0

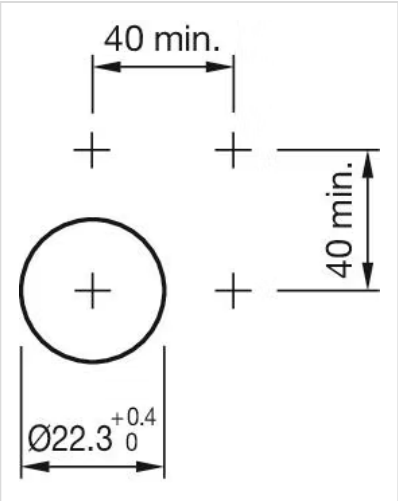

Dimension drawings:

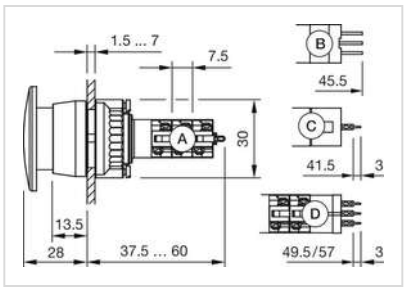

A = Solder terminal
B = Plug-in terminal 2.8 x 0.5 mm
C = Universal terminal 2.0 mm x 0.5 mm
D = Universal-Solder terminal

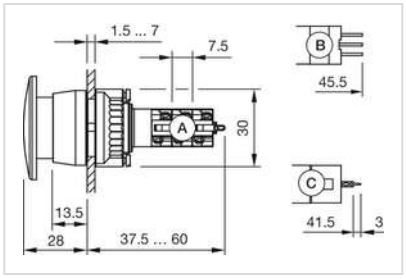

A = Solder terminal
B = Plug-in terminal 2.8 x 0.5 mm
C = Universal terminal 2.0 mm x 0.5 mm

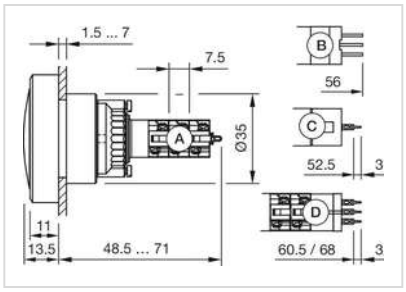

A = Solder terminal
B = Plug-in terminal 2.8 x 0.5 mm
C = Universal terminal 2.0 mm x 0.5 mm
D = Universal-Solder terminal

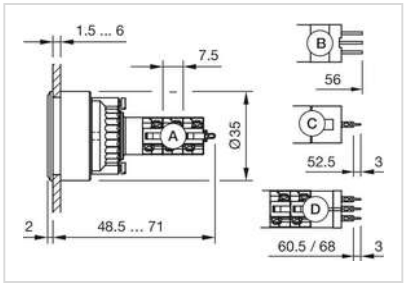

A = Solder terminal
B = Plug-in terminal 2.8 x 0.5 mm
C = Universal terminal 2.0 mm x 0.5 mm
Universal-Solder terminal

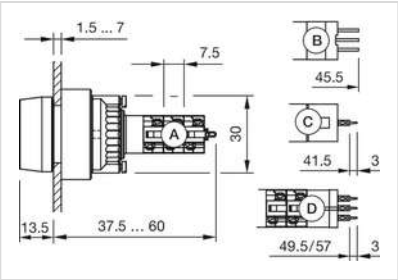

A = Solder terminal
B = Plug-in terminal 2.8 x 0.5 mm
C = Universal terminal 2.0 mm x 0.5 mm
D = Universal-Solder terminal