innodisk

The Total Solution For Industrial Flash Storage

USB Drive

3ME Series

Customer: _____

Customer Part Number: _____

Innodisk Part Number: _____

Innodisk Model Name: _____

Date: _____

Innodisk Approver	Customer Approver

Table of contents

TABLE OF CONTENTS 2
LIST OF FIGURES 4
LIST OF TABLES 5
1. PRODUCT OVERVIEW 6
1.1 INTRODUCTION OF USB DRIVE 6
1.2 PRODUCT VIEW 6
1.3 PRODUCT MODELS 6
1.4 CAPACITY 6
2. THEORY OF OPERATION 7
2.1 OVERVIEW 7
2.2 ERROR DETECTION AND CORRECTION 7
2.3 WEAR-LEVELING 7
2.4 BAD BLOCKS MANAGEMENT 8
3.1 CE AND FCC COMPATIBILITY 9
3.2 RoHS COMPLIANCE 9
3.3 ENVIRONMENTAL SPECIFICATIONS 9
3.4 GOLDEN FINGER 10
3.5 PIN ASSIGNMENT 10
3.7 WEIGHT 11
3.8 PERFORMANCE 11
3.9 NAND FLASH MEMORY 11
4. ELECTRICAL SPECIFICATIONS 12
4.1 POWER REQUIREMENT 12
4.2 POWER CONSUMPTION 12
4.3 DEVICE PARAMETERS 12
5. PART NUMBER RULE 13

REVISION HISTORY

Revision	Description	Date
Pre.	First Release	Apr., 2014
1.0	Modify ECC description	May., 2014
1.1	Add A19 part number	Aug., 2014
1.2	Renew the ROHS Declaration	Oct., 2014
1.3	Remove the Flash endurance SPEC	Jan., 2015
1.4	Add compatibility info. Modify PN rule Remove 4GB, add 64GB	Feb., 2016
1.5	Modify PN rule for 15nm	Mar., 2016
1.6	Modify 16GB performance	May., 2016
1.7	Modify LBA	Aug., 2016
1.8	Update RoHS/REACH/CE/FCC	Apr., 2017

List of Figures

FIGURE 1: USB DRIVE 3ME 6
FIGURE 2: USB DRIVE 3ME BLOCK DIAGRAM 7
FIGURE 3: USB DRIVE 3ME MECHANICAL DIMENSIONS 11

List of Tables

TABLE 1: SHOCK/VIBRATION TESTING FOR USB DRIVE 3ME 9
TABLE 2: USB DRIVE 3ME MTBF 10
TABLE 3: USB DRIVE 3ME TBW 10
TABLE 4: USB DRIVE 3ME PIN ASSIGNMENT 10
TABLE 5: USB DRIVE 3ME POWER REQUIREMENT 12
TABLE 6: POWER CONSUMPTION 12
TABLE 7: DEVICE PARAMETERS 12

1. Product Overview

1.1 Introduction of USB Drive

The Innodisk USB Drive products provide high capacity USB flash memory storage that electrically complies with High-speed USB 3.0 interface & backward compatible with USB 2.0 and 1.1. The device features attractive small form factor and the connectivity over USB3.0 and the NAND flash architecture provide a faster data transmission. In our default setting, the USB Drive will be set up as “Removable mode”.

1.2 Product View



Figure 1: USB Drive 3ME

1.3 Product Models

USB Drive 3ME is available in follow capacities.

- USB Drive 3ME 8GB
- USB Drive 3ME 16GB
- USB Drive 3ME 32GB
- USB Drive 3ME 64GB

1.4 Capacity

USB Drive 3ME provides unformatted from 8GB up to 64GB capacities within MLC Flash IC.

2. Theory of operation

2.1 Overview

Figure 2 shows the operation of USB Drive 3ME from the system level, including the major hardware blocks.

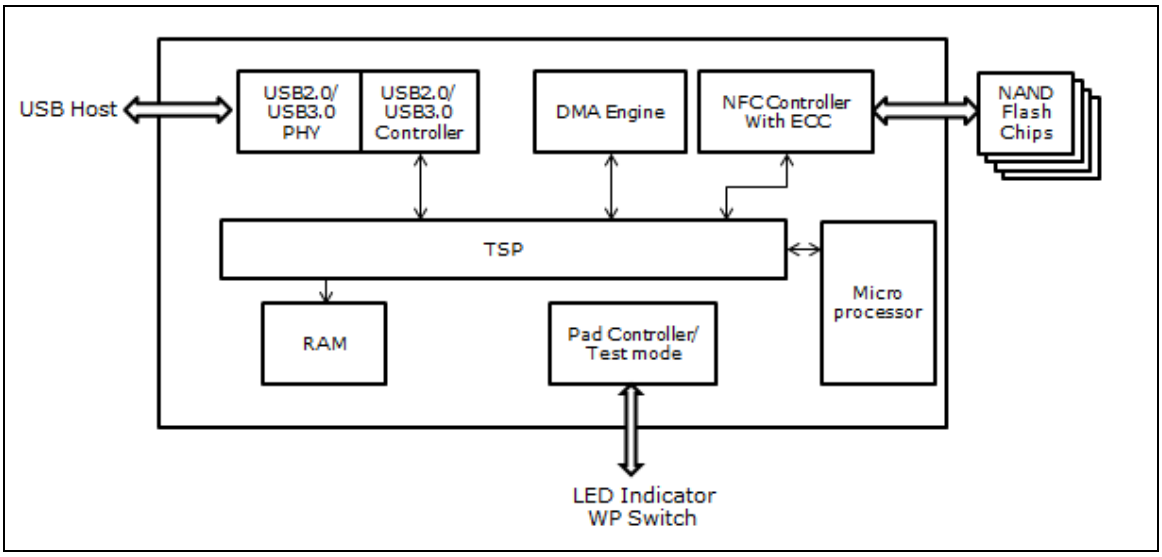

Figure 2: USB Drive 3ME Block Diagram

USB Drive 3ME integrates a USB3.0 controller and NAND flash memories. Communication with the host occurs through the host interface. Communication with the flash device(s) occurs through the flash interface.

2.2 Error Detection and Correction

Highly sophisticated Error Correction Code algorithms are implemented. The ECC unit consists of the Parity Unit (parity-byte generation) and the Syndrome Unit (syndrome-byte computation). This unit implements an algorithm that can correct 60 bits per 1024 bytes in an ECC block. Code-byte generation during write operations, as well as error detection during read operation, is implemented on the fly without any speed penalties.

2.3 Wear-Leveling

Flash memory can be erased within a limited number of times. This number is called the *erase cycle limit* or *write endurance limit* and is defined by the flash array vendor. The erase cycle limit applies to each individual erase block in the flash device.

USB Drive 3ME uses a static wear-leveling algorithm to ensure that consecutive writes of a specific sector are not written physically to the same page/block in the flash. This spreads flash media usage evenly across all pages, thereby extending flash lifetime.

2.4 Bad Blocks Management

Bad Blocks are blocks that contain one or more invalid bits whose reliability are not guaranteed. The Bad Blocks may be presented while the SSD is shipped, or may generate during the life time of the SSD. When the Bad Blocks is detected, it will be flagged, and not be used anymore. The SSD implement Bad Blocks management and replacement, Error Correct Code to avoid data error occurred. The functions will be enabled automatically to transfer data from Bad Blocks to spare blocks, and correct error bit. After the reserved block less than 40, the SSD will be locked, and cannot be written anymore.

3. Specifications

3.1 CE and FCC Compatibility

USB Drive 3ME conforms to CE and FCC requirements.

3.2 RoHS Compliance

USB Drive 3ME is fully compliant with RoHS directive.

3.3 Environmental Specifications

3.3.1 Temperature Ranges

Operating Temperature Range:

- Standard Grade: 0℃ ~ +70℃
- Industrial Grade: -40℃ ~ +85℃

Storage Temperature Range:

- Standard Grade: -55℃ to +95℃

3.3.2 Humidity

Relative Humidity: 10-95%, non-condensing

3.3.3 Shock and Vibration

Reliability	Test Conditions	Reference Standards
Vibration	7 Hz to 2K Hz, 20G, 3 axes	IEC 68-2-6
Mechanical Shock	Duration: 0.5ms, 1500G, 3 axes	IEC 68-2-27

Table 1: Shock/Vibration Testing for USB Drive 3ME

3.3.4 Mean Time between Failures (MTBF)

Table 2 summarizes the MTBF prediction results for various USB Drive 3ME configurations. The analysis was performed using a RAM Commander™ failure rate prediction.

- Failure Rate: The total number of failures within an item population, divided by the total number of life units expended by that population, during a particular measurement interval under stated condition.
- Mean Time between Failures (MTBF): A basic measure of reliability for repairable items: The mean number of life units during which all parts of the item perform within their specified limits, during a particular measurement interval under stated conditions.

Product	Condition	MTBF (Hours)
USB Drive 3ME	Telcordia SR-332 GB, 25℃	>3,000,000

Table 2: USB Drive 3ME MTBF

3.3.5 Terabyte Written (TBW)

Parameter	Value
TBW(Sequential Write)	
8GB	21.6
16GB	43.2
32GB	86.4
64GB	172.8

Table 3: USB Drive 3ME TBW

3.4 Golden finger

30μ”

3.5 Pin Assignment

USB Drive 3ME is designed within USB3.0 Interface. Particularly, its built-in power pin enables the device more compactable. Table 4 demonstrates USB Drive 3ME pin assignments.

Pin Number	Signal Name	Description
1	VBUS	Power
2	D-	USB 2.0 differential pair
3	D+	
4	GND	Ground for power return
5	StdA_SSRX-	SuperSpeed receiver differential pair
6	StdA_SSRX+	
7	GND_DRAIN	Ground for signal return
8	StdA_SSTX-	SuperSpeed transmitter differential pair
9	StdA_SSTX+	
Shell	Shield	Connector metal shell

Note: Tx and Rx are defined from the host perspective

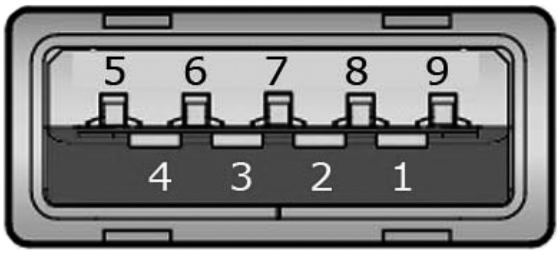

Table 4: USB Drive 3ME Pin Assignment

3.6 Mechanical Dimensions

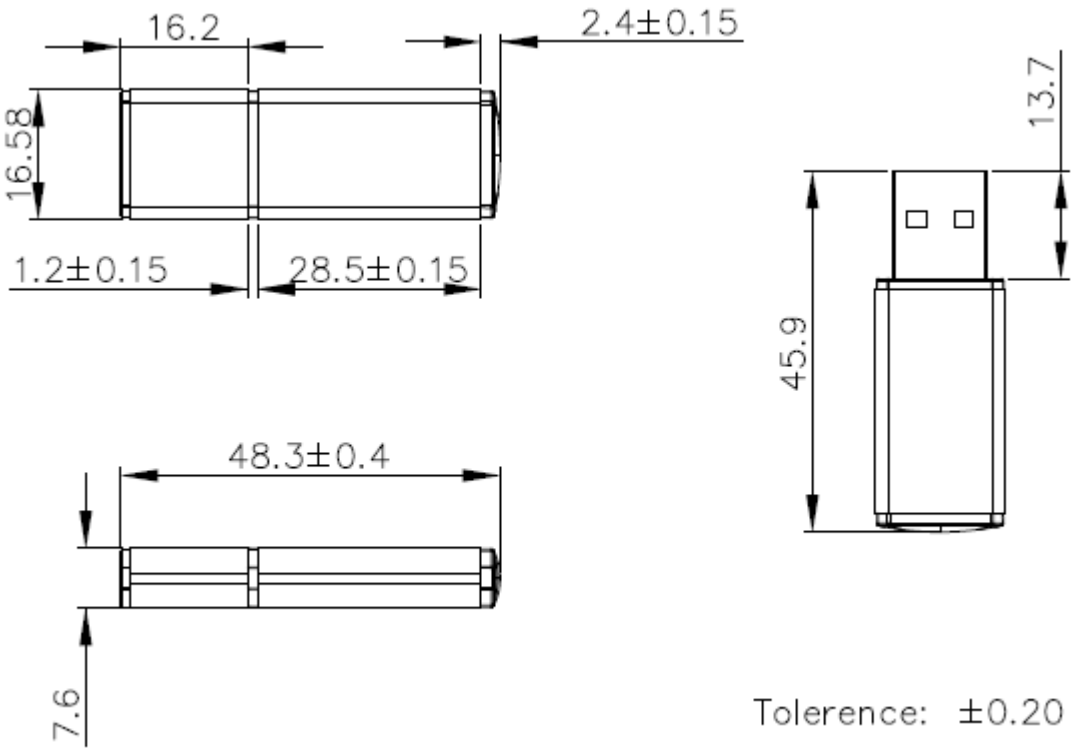

Figure 3: USB Drive 3ME mechanical dimensions

3.7 Weight

10g±2

3.8 Performance

Product name		8GB	16GB	32GB	64GB
USB Drive 3ME	Sequential Read (Max.)	100 MB/S	100 MB/S	100 MB/S	100 MB/S
	Sequential Write (Max.)	26 MB/S	26 MB/S	50 MB/S	50 MB/S

3.9 NAND Flash Memory

USB Drive 3ME uses Multi Level Cell (MLC) NAND flash memory, which is non-volatility and high reliability.

4. Electrical Specifications

4.1 Power Requirement

Item	Symbol	Rating	Unit
Input voltage	V_{IN}	+5 DC +- 5%	V

Table 5: USB Drive 3ME Power Requirement

4.2 Power Consumption

Mode	Power Consumption (mA)
Read	122 (max.)
Write	141 (max.)
Idle	67 (max.)

Table 6: Power Consumption

4.3 Device Parameters

Capacity	LBA	User capacity
8GB	15810560	7720MB
16GB	31686656	15472MB
32GB	63373312	30944MB
64GB	126812160	61920MB

Table 7: Device parameters

5. Part Number Rule

	1	2	3	4	5	6	7	8	9	10	11	12	13	14	15	16	17	18	19	20
	D	**E**	**U**	**A**	**1**	**-**	**0**	**8**	**G**	**I**	**6**	**1**	**B**	**C**	**1**	**S**	**C**	**-**	**x**	**x**
Description	Disk	Form Factor				-	Capacity			Category			Flash mode	Operation Temp.	PCB Version	Channel	Flash		Customized Code	

Definition	
Code 1st (Disk)	**Code 14th (Operation Temperature)**
D: Disk	C: Standard Grade (0℃~ +70℃)
Code 2nd ~ 5th (Form Factor)	W: Industrial Grade (-40℃~ +85℃)
EUA1: USB Drive	**Code 15th (Internal control)**
Code 7th ~9th (Capacity)	1~9: TSOP PCB version.
08G: 8GB	
16G: 16GB	**Code 16th (Channel)**
32G: 32GB	S: Single
64G: 64GB	
Code 10th ~12th (Category)	**Code 17th (Flash)**
I61: USB 3ME series	C: Toshiba MLC
Code 13th (Flash mode)	
B: Sync. Flash (15nm)	

Appendix

RoHS

宜鼎國際股份有限公司
Innodisk Corporation

Tel:(02)7703-3000 Fax:(02) 7703-3555 Internet: http://www.innodisk.com/

RoHS 自我宣告書(RoHS Declaration of Conformity)

Manufacturer Product: All Innodisk EM Flash and Dram products

一、 宜鼎國際股份有限公司（以下稱本公司）特此保證售予貴公司之所有產品，皆符合歐盟 2011/65/EU 關於 RoHS 之規範要求。

Innodisk Corporation declares that all products sold to the company, are complied with European Union RoHS Directive (2011/65/EU) requirement.

二、 本公司同意因本保證書或與本保證書相關事宜有所爭議時，雙方宜友好協商，達成協議。

Innodisk Corporation agrees that both parties shall settle any dispute arising from or in connection with this Declaration of Conformity by friendly negotiations.

Name of hazardous substance	Limited of RoHS ppm（mg/kg）
鉛（Pb）	< 1000 ppm
汞（Hg）	< 1000 ppm
鎘（Cd）	< 100 ppm
六價鉻（Cr 6+）	< 1000 ppm
多溴聯苯（PBBs）	< 1000 ppm
多溴二苯醚（PBDEs）	< 1000 ppm

立 保 證 書 人 **(Guarantor)**

Company name 公司名稱： Innodisk Corporation 宜鼎國際股份有限公司

Company Representative 公司代表人： Randy Chien 簡川勝

Company Representative Title 公司代表人職稱： Chairman 董事長

Date 日期： 2016 / 08 / 04

REACH

宜鼎國際股份有限公司
Innodisk Corporation

Tel:(02)7703-3000 Fax:(02) 7703-3555 Internet: http://www.innodisk.com/

REACH Declaration of Conformity

Manufacturer Product: All Innodisk EM Flash and Dram products

1.宜鼎國際股份有限公司（以下稱本公司）特此保證此售予貴公司之產品，皆符合歐盟化學品法案(Registration , Evaluation and Authorization of Chemicals；REACH)之規定 (http://www.echa.europa.eu/de/candidate-list-table **last updated: 20/06/2016**)。所提供之產品包含：(1) 產品或產品所使用到的所有原物料；(2)包裝材料；(3)設計、生產及重工過程中所使用到的所有原物料。

We Innodisk Corporation hereby declare that our products are in compliance with the requirements according to the REACH Regulation (http://www.echa.europa.eu/de/candidate-list-table **last updated: 20/06/2016**). Products include： 1) Product and raw material used by the product； 2) Packaging material ；3) Raw material used in the process of design, production and rework

2.本公司同意因本保證書或與本保證書相關事宜有所爭議時，雙方宜友好協商，達成協議。

InnoDisk Corporation agrees that both parties shall settle any dispute arising from or in connection with this Declaration of Conformity by friendly negotiations.

立 保 證 書 人 (Guarantor)

Company name 公司名稱： InnoDisk Corporation 宜鼎國際股份有限公司

Company Representative 公司代表人： Randy Chien 簡川勝

Company Representative Title 公司代表人職稱： Chairman 董事長

Date 日期： 2016 / 06 / 23

CE

CE

VERIFICATION OF COMPLIANCE

This Verification of Compliance is hereby issued to the below named company. The test results of this report relate only to the tested sample identified in this report.

Technical Standard: EMC DIRECTIVE 2014/30/EU (EN55032 / EN55024)

General Information

Applicant: Innodisk Corporation
5F., No. 237, Sec. 1, Datong Rd., Xizhi Dist.,
New Taipei City 22161, Taiwan (R.O.C)

Product Description

EUT Description: USB
Brand Name: Innodisk
Model Number: USB Drive 3$*#
$:Flash type: (S:SLC, I:iSLC, M:MLC, T:3D TLC, A~Z:Others)
*:Product line: (E:Embedded, G:EverGreen,
R:InnoRobust, S:Server, V:InnoREC, A~Z:Others)
#:Product Generation: (empty, 0~9)

Measurement Standard

EN 55032: 2012 / AC: 2013
CISPR 32: 2012
EN 61000-3-2: 2014
EN 61000-3-3: 2013
EN 55024: 2010 + A1: 2015
(IEC 61000-4-2: 2008; IEC 61000-4-3: 2006 + A1: 2007 + A2: 2010; IEC 61000-4-4: 2012; IEC 61000-4-5: 2014; IEC 61000-4-6: 2013; IEC 61000-4-8: 2009; IEC 61000-4-11: 2004)

Measurement Facilities

Xindian Lab.: *Compliance Certification Services Inc.*
No.163-1, Jhongsheng Rd., Xindian Dist., New Taipei City, 23151 Taiwan.
Tel: +886-2-22170894 / Fax: +886-2-22171029

This device has been shown to be in compliance with and was tested in accordance with the measurement procedures specified in the Standards & Specifications listed above and as indicated in the measurement report number: TI70406D01-E

Sam Hu

Sam Hu / Assistant Manager
Date: April 10, 2017

CCSRF
程智科技股份有限公司
Compliance Certification Services Inc.

FCC

VERIFICATION OF COMPLIANCE

This Verification of Compliance is hereby issued to the below named company. The test results of this report relate only to the tested sample identified in this report.

Technical Standard: FCC Part 15 Class B
IC ICES-003

General Information

Applicant: Innodisk Corporation
5F., No. 237, Sec. 1, Datong Rd., Xizhi Dist.,
New Taipei City 22161, Taiwan (R.O.C)

Product Description

EUT Description: USB
Brand Name: Innodisk
Model Number: USB Drive 3$*#
$:Flash type: (S:SLC, I:iSLC, M:MLC, T:3D TLC, A~Z:Others)
*:Product line: (E:Embedded, G:EverGreen,
R:InnoRobust, S:Server, V:InnoREC, A~Z:Others)
#:Product Generation: (empty, 0~9)

Measurement Facilities

Xindian Lab.: *Compliance Certification Services Inc.*
No.163-1, Jhongsheng Rd., Xindian Dist., New Taipei City, 23151 Taiwan.
Tel: +886-2-22170894 / Fax: +886-2-22174029

This device has been shown to be in compliance with and was tested in accordance with the measurement procedures specified in the Standards & Specifications listed above and as indicated in the measurement report number: T170406D01-D

Sam Hu

Sam Hu / Assistant Manager
Date: April 10, 2017

CCSRF
程智科技股份有限公司
Compliance Certification Services Inc.