TECHNICAL DATASHEET

Incremental Encoder RI 36-H



- Miniature industry encoder for high number of pulses
- Short mounting length
- Easy mounting procedure
- Applications: motors, machine tools, robots, automated SMD equipment

NUMBER OF PULSES

5 / 10 / 20 / 25 / 50 / 60 / 100 / 200 / 250 / 300 / 360 / 500 / 600 / 720 / 1000 / 1024 / 1250 / 1500 / 2000 / 2048 / 2500 / 3000 / 3600
Other number of pulses on request

TECHNICAL DATA
mechanical

Housing diameter	36 mm
Shaft diameter	4 mm / 6 mm / 8 mm / 10 mm (Hubshaft)
Flange (Mounting of housing)	Tether
Mounting of shaft	Front clamping ring
Protection class shaft input (EN 60529)	IP64
Protection class housing (EN 60529)	IP64
Axial endplay of mounting shaft (hubshaft)	± 0.5 mm
Radial runout of mating shaft (hubshaft)	± 0.15 mm
Max. speed	max. 10 000 rpm
Torque	≤ 1 Ncm
Moment of inertia	approx. 3 gcm²
Vibration resistance (DIN EN 60068-2-6)	100 m/s² (10 ... 2000 Hz)
Shock resistance (DIN EN 60068-2-27)	1000 m/s² (6 ms)
Operating temperature	-10 °C ... +70 °C
Storage temperature	-25 °C ... +85 °C
Material housing	Aluminum
Weight	approx. 80 g
Connection	Cable, axial or radial

TECHNICAL DATA
electrical

General design	as per DIN EN 61010-1, protection class III, contamination level 2, overvoltage class II
Supply voltage [1]	RS422 + Alarm (R), RS422 + Sense (T): DC 5 V ±10 % Push-pull (K), Push-pull antivalent (I): DC 10-30 V
Max. current w/o load	40 mA (DC 5 V), 60 mA (DC 10 V), 30 mA (DC 24 V)
Max. pulse frequency	RS422: 300 kHz Push-pull: 200 kHz

TECHNICAL DATASHEET

Incremental Encoder RI 36-H

TECHNICAL DATA
electrical (continued)

Standard output versions	RS422 + Sense (T): A, B, N, $\overline{A}$, $\overline{B}$, $\overline{N}$, Sense RS422 + Alarm (R): A, B, N, $\overline{A}$, $\overline{B}$, $\overline{N}$, $\overline{Alarm}$ Push-pull (K): A, B, N, $\overline{Alarm}$ Push-pull complementary (I): A, B, N, $\overline{A}$, $\overline{B}$, $\overline{N}$, $\overline{Alarm}$
Pulse width error	± max. 25° electrical
Number of pulses	5 ... 3600
Alarm output	NPN-O.C., max. 5 mA
Pulse shape	Square wave
Pulse duty factor	1:1

[1] With push-pull (K) and push-pull complementary (I): pole protection

ELECTRICAL CONNECTIONS
Cable PVC

Cable PVC (A, B)		**Output**		
Colour	**Litze mm [2]**	**RS422 (R, T)**	**push-pull (K)**	**push-pull complementary (I)**
red	0.5	DC 5 V	DC 10 - 30 V	DC 10 - 30 V
yellow/red	0.14	Sense V_{CC}		Sense V_{CC}
white	0.14	Channel A	Channel A	Channel A
white/brown	0.14	Channel $\overline{A}$		Channel $\overline{A}$
green	0.14	Channel B	Channel B	Channel B
green/brown	0.14	Channel $\overline{B}$		Channel $\overline{B}$
yellow	0.14	Channel N	Channel N	Channel N
yellow/brown	0.14	Channel $\overline{N}$		Channel $\overline{N}$
black	0.5	GND	GND	GND
yellow/black	0.14	$\overline{Alarm}$/Sense GND [1]	$\overline{Alarm}$	$\overline{Alarm}$
screen [2]		screen [2]	screen [2]	screen [2]

[1] depending on ordering code

[2] connected with encoder housing

TECHNICAL DATASHEET

Incremental Encoder RI 36-H

DIMENSIONED DRAWINGS

Torque support "J"

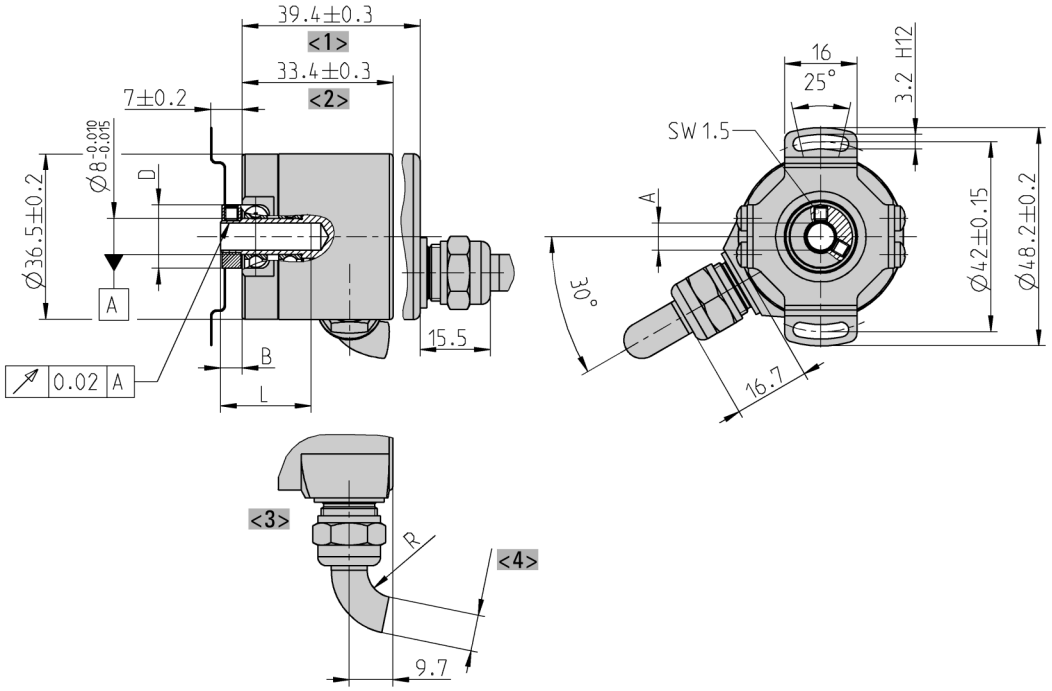

Dim.	Hollow shaft Ø				Unit
A	4 +0.01	6 +0.01	8 +0.01	10 +0.01	mm
A*	4 g7	10 g7	8 g7	10 g7	mm
B	4.8 ± 0.2	4.8 ± 0.2	4.8 ± 0.2	4.8 ± 0.2	mm
D	12	14	16	18	mm
L_{min}	6	9	12	15	mm
L_{max}	20	20	20	20	mm
A* = diameter of connection shaft					
B = space between housing and shaft					
D = diameter clamping ring					
L = length of connection shaft					

<1> axial
<2> radial
<3> Cable radial
<4> Ø 6 or Ø 8
Cable bending radius R for flexible installation ≥ 100 mm
Cable bending radius R for fixed installation ≥ 40 mm
Tightening torque of set screw: 15 Ncm

Dimensions in mm

DIMENSIONED DRAWINGS (continued)

Torque support "F"

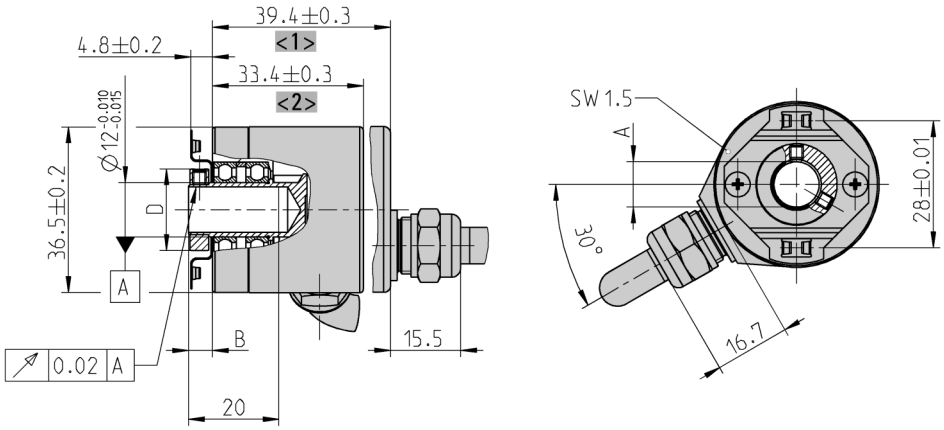

Dim.	Hollow shaft Ø				Unit
A	4 +0.01	6 +0.01	8 +0.01	10 +0.01	mm
A*	4 g7	10 g7	8 g7	10 g7	mm
B	4.8 ± 0.2	4.8 ± 0.2	4.8 ± 0.2	4.8 ± 0.2	mm
D	12	14	16	18	mm
L min	6	9	12	15	mm
L max	20	20	20	20	mm
A* = diameter of connection shaft					
B = space between housing and shaft					
D = diameter clamping ring					
L = length of connection shaft					

<1> axial
<2> radial
Cable bending radius R for flexible installation ≥ 100 mm
Cable bending radius R for fixed installation ≥ 40 mm
Tightening torque of set screw: 15 Ncm
The hubshaft with tether (F) as torque supportmust be fixed by a cylindric pin (2.4 mm ∅) at the machine side.

Dimensions in mm

TECHNICAL DATASHEET

Incremental Encoder RI 36-H

ORDERING INFORMATION

Type	Number of pulses	Supply voltage [1]	Flange, Protection, Shaft [3, 4]	Output [2]	Connection
☐	☐	☐	☐	☐	☐
RI36-H	**5 ... 3600**	**A** DC 5 V **E** DC 10 - 30 V	**F.30** Spring tether "F" with clamping ring front, IP64, 4 mm **F.31** Spring tether "F" with clamping ring front, IP64, 6 mm **F.3C** Spring tether "F" with clamping ring front, IP64, 8 mm **F.32** Spring tether "F" with clamping ring front, IP64, 10 mm **J.30** Spring tether "J" with clamping ring front, IP64, 4 mm **J.31** Spring tether "J" with clamping ring front, IP64, 6 mm **J.3C** Spring tether "J" with clamping ring front, IP64, 8 mm **J.32** Spring tether "J" with clamping ring front, IP64, 10 mm	**R** RS422 +Alarm **T** RS422 +Sense **K** Push-pull **I** Push-pull complementary	**A** Cable, axial **B** Cable, radial **E-I** M23 connector (Conin) at 1 m TPE cable, cw **E-D** M23 connector (Conin) at 1 m TPE cable, ccw

[1] DC 10 - 30 V only with push-pull
[2] Output code "K" and "I": short-circuit-proof
[3] Fixing of hubshaft with tether by cylindrical pin
[4] Fixing of hubshaft with tether by oblong hole

ORDERING INFORMATION
Selection of cable length

Versions with cable outlet (connection A, B, E or F) are available with various lengths of cable. To order your desired cable length, please add the respective code to the end of your ordering code. Further cable lengths on request.

Code	Cable length
without code	1.5 m
-D0	3 m
-F0	5 m
-K0	10 m
-P0	15 m
-U0	20 m
-V0	25 m

TECHNICAL DATASHEET

Incremental Encoder RI 36-H
Accessories

CONNECTORS

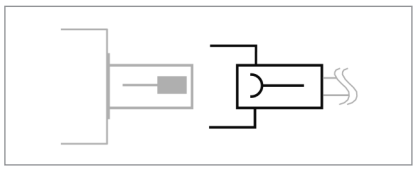

Connector (socket) matching with encoder connector	Ordering code
M23 (Conin), 12 pole, PG9, cw, mating connector for connection C/D/-I	3 539 202

CONNECTORS

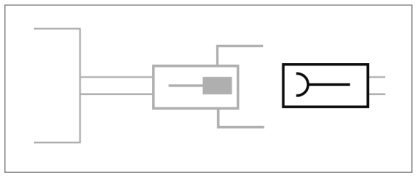

Coupling (socket) matching with encoder cable with connector	Ordering code
M23 (Conin), 12 pole, cw, mating connector for connection -C (cable plug 3 539 186)	3 539 187

CONNECTORS

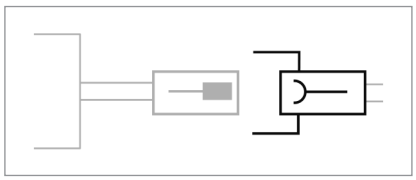

Connector (socket) matching with encoder cable with connector	Ordering code
M23 (Conin), 12 pole, ccw, mating connector for connection G/H/-D/-H	3 539 229

CONNECTING CABLES

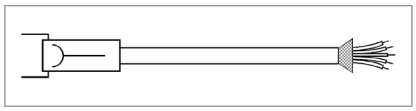

Connecting cables with plug (socket) on one end	Ordering code
M23 (Conin), 12 pole, TPE cable, cw, mating connector for connection C/D/-I, 3 m	1 522 348
M23 (Conin), 12 pole, TPE cable, cw, mating connector for connection C/D/-I, 5 m	1 522 349
M23 (Conin), 12 pole, TPE cable, cw, mating connector for connection C/D/-I, 10 m	1 522 350
M23 (Conin), 12 pole, TPE cable, cw, mating connector for connection C/D/-I, 15 m	1 522 454
M23 (Conin), 12 pole, TPE cable, cw, mating connector for connection C/D/-I, 20 m	1 522 456
M23 (Conin), 12 pole, TPE cable, cw, mating connector for connection C/D/-I, 25 m	1 522 457
M23 (Conin), 12 pole, TPE cable, cw, mating connector for connection C/D/-I, 30 m	1 522 464
M23 (Conin), 12 pole, TPE cable, cw, mating connector for connection C/D/-I, 40 m	1 522 643
M23 (Conin), 12 pole, TPE cable, cw, mating connector for connection C/D/-I, 50 m	1 522 793
M23 (Conin), 12 pole, TPE cable, ccw, mating connector for connection G/H/-D/-H, 3 m	1 522 394
M23 (Conin), 12 pole, TPE cable, ccw, mating connector for connection G/H/-D/-H, 5 m	1 522 395

TECHNICAL DATASHEET

Incremental Encoder RI 36-H
Accessories

CONNECTING CABLES (continued)

Connecting cables with plug (socket) on one end	Ordering code
M23 (Conin), 12 pole, TPE cable, ccw, mating connector for connection G/H/-D/-H, 10 m	1 522 396
M23 (Conin), 12 pole, TPE cable, ccw, mating connector for connection G/H/-D/-H, 15 m	1 522 447
M23 (Conin), 12 pole, TPE cable, ccw, mating connector for connection G/H/-D/-H, 20 m	1 522 461
M23 (Conin), 12 pole, TPE cable, ccw, mating connector for connection G/H/-D/-H, 25 m	1 522 462
M23 (Conin), 12 pole, TPE cable, ccw, mating connector for connection G/H/-D/-H, 30 m	1 522 463
M23 (Conin), 12 pole, TPE cable, ccw, mating connector for connection G/H/-D/-H, 40 m	1 522 463

CONNECTING CABLES

Cable not made up with connectors	Ordering code
PVC cable, 10-core + screen	3 280 114 + length
PVC cable, 6-core + screen	3 280 113 + length
TPE cable, 12-core + screen	3 280 112 + length