P17G PASSIVE SEPARATOR

LUMEL EVERYTHING COUNTS

FEATURES:

INPUT: 0/4..20 mA

OUTPUTS: 0/4..20 mA

GALVANIC ISOLATION:



- For the separation of measuring signals (e.g. in PLC).
- Thin casing - 6.2 mm.
- Standard d.c. current output signal 0/4 - 20 mA.
- Does not require an auxiliary supply voltage.

EXAMPLE OF APPLICATION

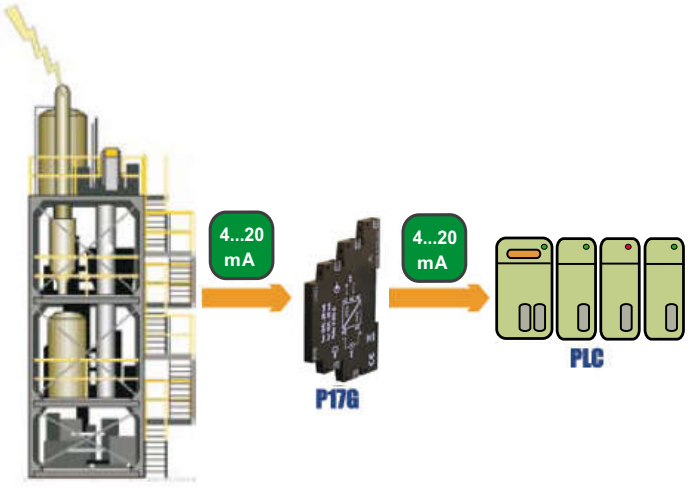

Galvanic separation (protection of PLC controller inputs).

INPUTS

Input type	Range	Overload	Error
Current 0..20 mA	0 .. 20 mA	Maximal input current 40 mA	**Conversion error:** +/- 0.2 % **Additional errors:** - from load resistance changes ≤ 0.15 %/ 100 Ω - from ambient temperature changes: ≤ 0.05 %/ 10°C
	4 .. 20 mA		

OUTPUTS

Output type	Admissible load resistance	Pulsations
Current 0 .. 20 mA, (4..20 mA)	R_{load} < 500 Ω	≤ 10 mV

EXTERNAL FEATURES

Overall dimensions	6.2 x 77.5 x 100 mm	
Weight	80 g	
Protection grade	ensured by the casing: IP50	from terminal side: IP20
Fixing	on a 35 mm DIN rail	acc. to EN 60715

RATED OPERATING CONDITIONS

Temperature	ambient: -20...23...65°C	storage: -40...85°C
Humidity	< 95%	inadmissible condensation
Operating position	any	

Export department:
+48 68 45 75 130
e-mail: export@lumel.com.pl

LUMEL S.A.
ul. Słubicka 4
65-127 Zielona Góra
POLAND
WWW.LUMEL.COM.PL

P17G PASSIVE SEPARATOR

SAFETY AND COMPATIBILITY REQUIREMENTS

Electromagnetic compatibility	noise immunity	acc. to EN 61000-6-2
	noise emissions	acc. to EN 61000-6-4
Isolation between circuits	basic	acc. to EN 61010-1
Pollution level	2	
Installation category	III	
Maximal phase-to-earth operating voltage	50 V	

INSTALLATION

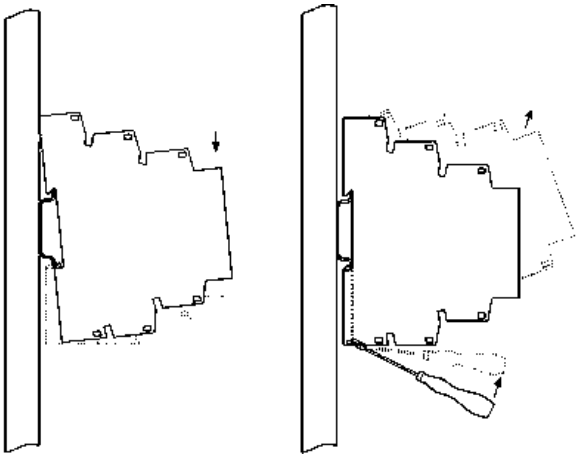

Fig.1. Way of assembling/disassembling on the rail.

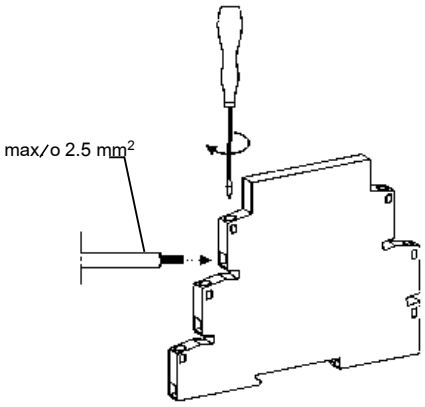

Fig.2. Way of wire fixing.

CONNECTION DIAGRAM

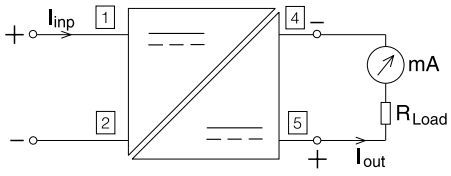

ORDERING

Code	Description
P17G 000	Passive separator P17G input: 0/4...20mA; output: 0/4...20mA; supplied from a current loop; multilanguage service manual (polish, english,german, russian) test certificate

For more information about LUMEL's products, please visit our website: www.lumel.com.pl

Export department:
+48 68 45 75 130
e-mail: export@lumel.com.pl

LUMEL S.A.
ul. Słubicka 4
65-127 Zielona Góra
POLAND
WWW.LUMEL.COM.PL