LASCAR PSU 303

Dual Rail Linear Power Supply

The PSU 303 is a compact, split 'open' mains power supply unit designed primarily for OEM use. The linear regulator ICs used have over-current and over-temperature protection and offer 200mA @ +5V d.c. and 50mA @-5V d.c. ouputs.

- 200mA @ 5V d.c. and 50mA @ -5V d.c. Outputs
- Simple Screw-Terminal Connection
- Encapsulated Mains Transformer
- Positive and Negative Fixed Rails
- Compact, Low Profile Design

Standard Unit					Stock Number PSU 303
Specification		**Min.**	**Typ.**	**Max.**	**Unit**
Load regulation				1	%
Line regulation				1	%
Ripple				0.5	mV
Operating temperature range		0		50	°C
Output					
Positive	V		5		V
	I			200	mA
Negative	V		-5		V
	I			-50	mA
Input (50-60Hz) - selectable		110	120	125	VAC
		215	240	245	

SAFETY

For safe operation, the unit must be installed in an enclosure which prevents accidental contact with hazardous voltages, by providing appropriate insulation or guarding. If the enclosure is made of a conducting material or the internal surfaces have a conductive coating, ensure that no part of the power supply will come into contact with it, and maintain an air gap clearance of minimum 10mm. The PSU 303 is short circuit proof but the mains lead to the unit must be fused with a 100mA fuse. In general, it is the responsibility of the user to ensure that the incorporation of the power supply unit into the OEM equipment conforms to the relevant sections of BS EN 61558-1: 1998, in accordance with the Low Voltage Directive (LVD 93/68/EEC).

IF IN DOUBT CONTACT A LASCAR APPLICATIONS ENGINEER.

SELECTING MAINS INPUT VOLTAGE

The unit is normally supplied unconfigured. The unit can be used with 120 and 240V a.c. supplies. Follow the correct wiring diagram when using this power supply unit. Incorrect connection may damage the power supply unit.

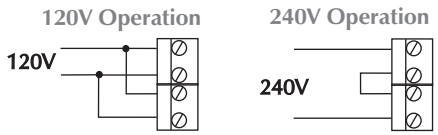

IF IN DOUBT CONTACT A LASCAR APPLICATIONS ENGINEER.

DIMENSIONS All dimensions in mm (inches)

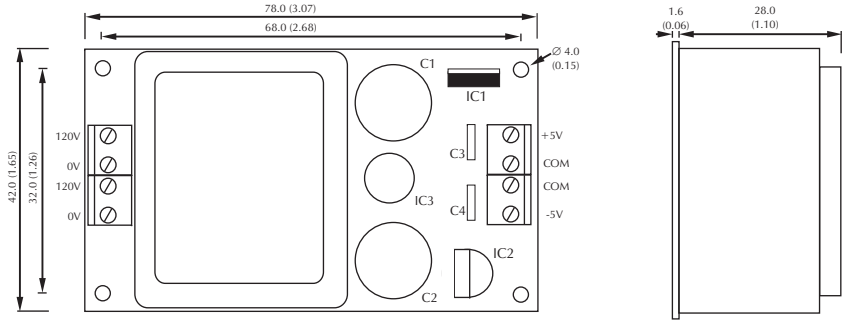

LASCAR ELECTRONICS LTD.
MODULE HOUSE, WHITEPARISH,
WILTSHIRE SP5 2SJ UK
TEL: +44 (0)1794 884567 FAX: +44 (0)1794 884616
E-mail: sales@lascar.co.uk

LASCAR ELECTRONICS INC.
4258 WEST 12th Street,
ERIE, PA 16505 USA
TEL: +1 (814) 835 0621 FAX: +1 (814) 838 8141
E-mail: us-sales@lascarelectronics.com

LASCAR ELECTRONICS (HK) LTD.
8th FLOOR, CHINA AEROSPACE CENTRE,
143 HOI BUN ROAD, KWUN TONG, KOWLOON,HK
TEL: +852 2389 6502 FAX: +852 2389 6535
E- mail: saleshk@lascar.com.hk

LASCAR PSU 303

Dual Rail Linear Power Supply

The PSU 303 is a compact, split 'open' mains power supply unit designed primarily for OEM use. The linear regulator ICs used have over-current and over-temperature protection and offer 200mA @ +5V d.c. and 50mA @-5V d.c. ouputs.

- 200mA @ 5V d.c. and 50mA @ -5V d.c. Outputs
- Simple Screw-Terminal Connection
- Encapsulated Mains Transformer
- Positive and Negative Fixed Rails
- Compact, Low Profile Design

Standard Unit — Stock Number PSU 303

Specification		Min.	Typ.	Max.	Unit
Load regulation				1	%
Line regulation				1	%
Ripple				0.5	mV
Operating temperature range		0		50	°C
Output					
Positive	V		5		V
	I			200	mA
Negative	V		-5		V
	I			-50	mA
Input (50-60Hz) - selectable		110	120	125	VAC
		215	240	245	

SAFETY

For safe operation, the unit must be installed in an enclosure which prevents accidental contact with hazardous voltages, by providing appropriate insulation or guarding. If the enclosure is made of a conducting material or the internal surfaces have a conductive coating, ensure that no part of the power supply will come into contact with it, and maintain an air gap clearance of minimum 10mm. The PSU 303 is short circuit proof but the mains lead to the unit must be fused with a 100mA fuse. In general, it is the responsibility of the user to ensure that the incorporation of the power supply unit into the OEM equipment conforms to the relevant sections of BS EN 61558-1: 1998, in accordance with the Low Voltage Directive (LVD 93/68/EEC).

IF IN DOUBT CONTACT A LASCAR APPLICATIONS ENGINEER.

SELECTING MAINS INPUT VOLTAGE

The unit is normally supplied unconfigured. The unit can be used with 120 and 240V a.c. supplies. Follow the correct wiring diagram when using this power supply unit. Incorrect connection may damage the power supply unit.

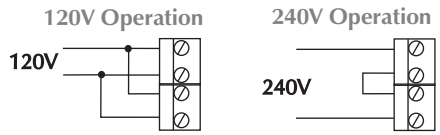

IF IN DOUBT CONTACT A LASCAR APPLICATIONS ENGINEER.

DIMENSIONS All dimensions in mm (inches)

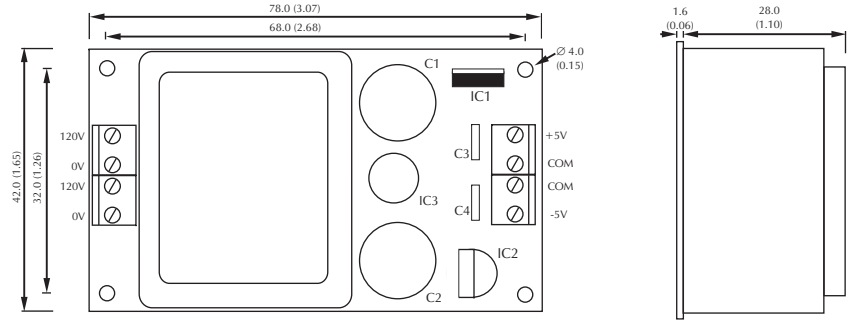

Specifications liable to change without prior warning PSU 303 Issue 6 09/2010 S.L. Applies to PSU 303/2

No: 716 - Page 1 of 1

LASCAR ELECTRONICS LTD.
MODULE HOUSE, WHITEPARISH,
WILTSHIRE SP5 2SJ UK
TEL: +44 (0)1794 884567 FAX: +44 (0)1794 884616
E-mail: sales@lascar.co.uk

LASCAR ELECTRONICS INC.
4258 WEST 12th Street,
ERIE, PA 16505 USA
TEL: +1 (814) 835 0621 FAX: +1 (814) 838 8141
E-mail: us-sales@lascarelectronics.com

LASCAR ELECTRONICS (HK) LTD.
8th FLOOR, CHINA AEROSPACE CENTRE,
143 HOI BUN ROAD, KWUN TONG, KOWLOON,HK
TEL: +852 2389 6502 FAX: +852 2389 6535
E- mail: saleshk@lascar.com.hk