HTJ

1/4" panel mount fuse holder family



Agency information

Environmental compliance

RoHS

Ordering part number

BK1-HTJ-602I

- Packaging prefix
- Family name
- Type

Product features

- For 1/4" fuses
- Panel mount fuse holder
- 250 Vac rating and up to 15 A

Packaging prefix

- BK1- (1000 parts per case pack)
- BK2- (2000 parts per case pack)
- BK16- (1600 parts per carton)

Specifications

Part number	Voltage rating (Vac)	Current rating (A)	Body material	Contact/clip material	Agency
BK16-HTJ-601I	250	10	Bakelite, UL 94V-0, black	Clip: copper alloy, nickel plated Terminals: brass, nickel plated Spring: steel	cURus, CE
BK1-HTJ-602I	250	10	Bakelite, UL 94V-0, black	Clip: copper alloy, nickel plated Terminals: brass, nickel plated Spring: steel	CE
BK1-HTJ-605I	250	10	Bakelite, UL 94V-0, black	Clip: brass, nickel plated Terminals: brass, nickel plated Spring: steel	cURus, CE
BK1-HTJ-606I	250	10	Bakelite, UL 94V-0, black	Clip: brass, tin plated Terminals: brass, tin plated Spring: steel	cURus, CE
BK2-HTJ-608I	250	15	Bakelite, UL 94V-0, black	Clip: copper alloy, nickel plated Terminals: brass, nickel plated Spring: steel	cURus, CE

Dimensions- mm

HTJ-601I

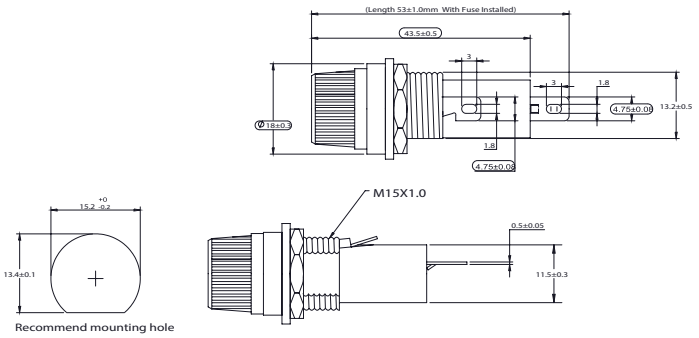

HTJ-602I

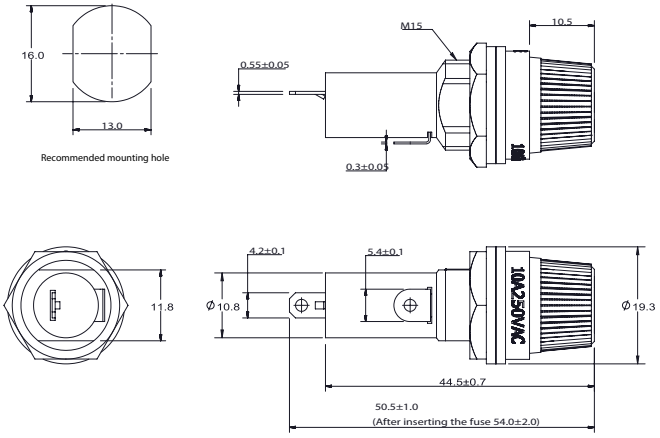

HTJ-605I

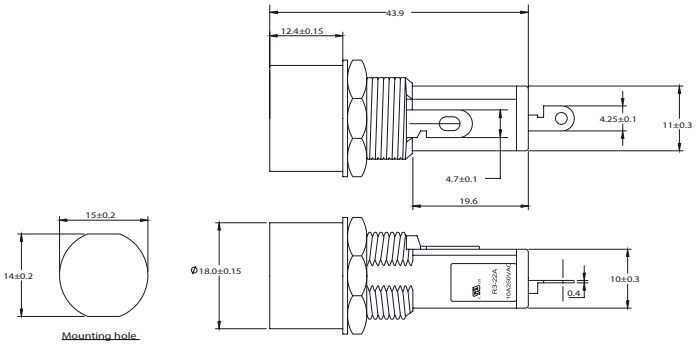

HTJ-606I

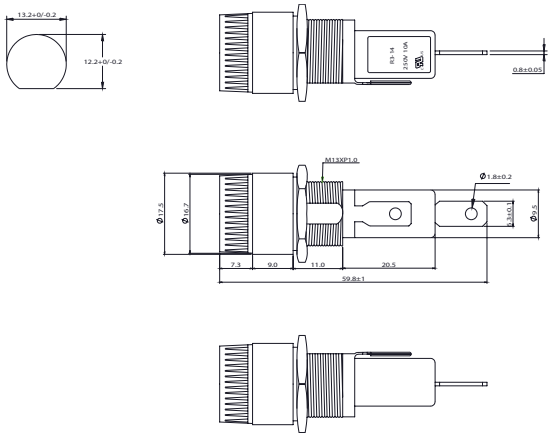

Dimensions- mm

HTJ-608I

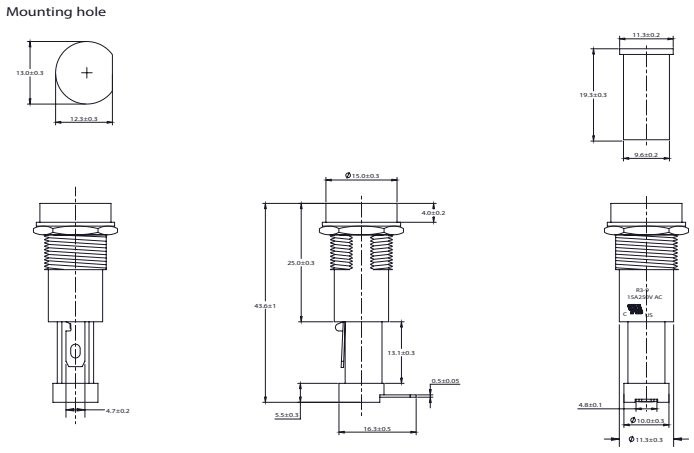

Life Support Policy: Eaton does not authorize the use of any of its products for use in life support devices or systems without the express written approval of an officer of the Company. Life support systems are devices which support or sustain life, and whose failure to perform, when properly used in accordance with instructions for use provided in the labeling, can be reasonably expected to result in significant injury to the user.

Eaton reserves the right, without notice, to change design or construction of any products and to discontinue or limit distribution of any products. Eaton also reserves the right to change or update, without notice, any technical information contained in this bulletin.

Eaton
Electronics Division
1000 Eaton Boulevard
Cleveland, OH 44122
United States
Eaton.com/electronics

© 2021 Eaton
All Rights Reserved
Printed in USA
Publication No. ELX1020 BU-ELX21021
February 2021

Eaton is a registered trademark.

All other trademarks are property of their respective owners.

Follow us on social media to get the latest product and support information.