**Product Data Sheet** **9293510708**
VWCE119PHGKS
4312 NM

ebmpapst

engineering a better life



**4312 NM**

**INDEX**

**1 General ..... 3**

**2 Mechanics ..... 3**

2.1 General ..... 3
2.2 Connections ..... 3

**3 Operating Data ..... 4**

3.1 Electrical Operating Data ..... 4
3.2 Electrical Features ..... 5
3.3 Aerodynamics ..... 6
3.4 Sound Data ..... 7

**4 Environment ..... 7**

4.1 General ..... 7
4.2 Climatic Requirements ..... 7
4.3 Mechanical Requirements ..... 8

**5 Safety ..... 9**

5.1 Electrical Safety ..... 9
5.2 Approval Tests ..... 9

**6 Reliability ..... 9**

6.1 General ..... 9

## 1 General

| | | |
|---|---|---|
| Fan type | Axial | |
| Rotating direction looking at rotor | Clockwise | |
| Airflow direction | Air outlet over struts | |
| Bearing system | Ball bearing | |
| Mounting position - shaft | Any | |

## 2 Mechanics

### 2.1 General

| | | |
|---|---|---|
| Width | 119,0 mm | |
| Height | 119,0 mm | |
| Depth | 32 mm | |
| Mass | 0,23 kg | |
| Housing material | Plastic | |
| Impeller material | Plastic | |
| Max. torque when mounted across both mounting flanges<br>Screw size | Wire outlet corner: 80 Ncm<br>Remaining corners: 80 Ncm<br>ISO 4762 - M4 degreased, without an additional brace and without washer | |
| Rotor protrusion max. | 0,4 mm | |

### 2.2 Connections

| | | |
|---|---|---|
| Electrical connection | Wires | |
| Lead wire length<br>Tolerance | L = 310 mm<br>+- 10,0 mm | |
| Wire size (AWG) | 24 | |
| Insulation diameter | 1,5 mm | |






| Wire | Color | Operation |
|---|---|---|
| 1 | red | + UB |
| 2 | blue | - GND |

## 3 Operating Data

### 3.1 Electrical Operating Data

Measurement conditions: Normal air density = 1,2 kg/m3; Temperature 23°C +/- 3°C; Motor axis horizontal; warm-up time before measuring 5 minutes (unless otherwise specified). In the intake and outlet area should not be any solid obstruction within 0,5 m.

Δp = 0: corresp. to free air flow (see chapter aerodynamics)
I: corresp. to arithm. mean current value

| Features | Condition | Symbol | Values | | |
|---|---|---|---|---|---|
| Voltage range | | U | 6 V | | 15 V |
| Nominal voltage | | $U_N$ | | 12 V | |
| Power consumption<br>Tolerance | Δp = 0<br>0010 | P | 0,4 W<br>+- 17,5 % | 2,1 W<br>+- 12,5 % | 3,5 W<br>+- 15 % |
| Current consumption<br>Tolerance | Δp = 0<br>0010 | I | 70 mA<br>+- 17,5 % | 175 mA<br>+- 12,5 % | 235 mA<br>+- 15 % |
| Speed<br>Tolerance | Δp = 0<br>0010 | n | 1.100 1/min<br>+- 12,5 % | 2.100 1/min<br>+- 7,5 % | 2.500 1/min<br>+- 10 % |
| Starting current consumption | | | | 550 mA | |

### 3.2 Electrical Features

| | | |
|---|---|---|
| Electronic function | None | |
| Reversed polarity protection<br>Max. residual current at $U_N$ | Rectifying diode<br>$I_F$ < 100 uA | |
| Locked rotor protection | Auto restart | |
| Locked rotor current at $U_N$ | $I_{block}$ approx. 450 mA | |
| Clock signal at locked rotor | $t_3$ / $t_4$ typical: 0,4 s / 5 s | |

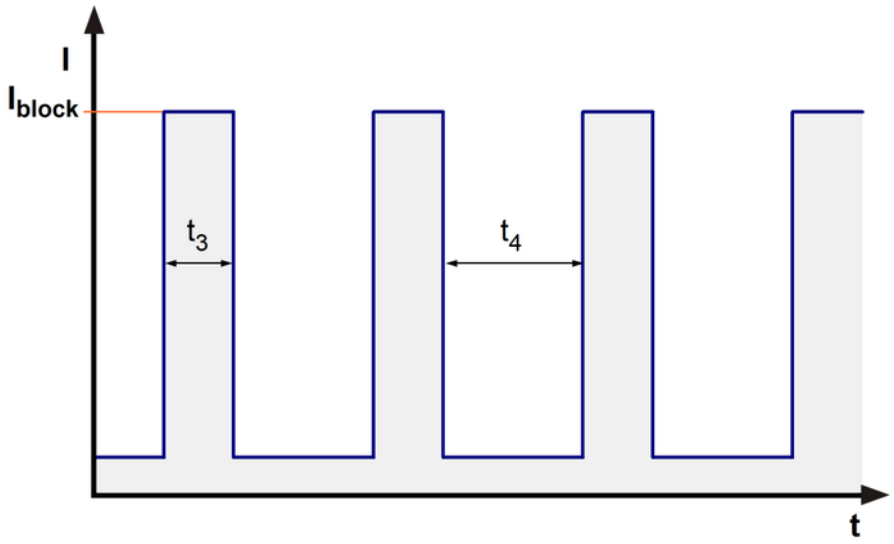


locked rotor at 12V
Startup current at 24V; 0 - 2100 rpm
Typical running current at 12V - free blowing, 2100 rpm

### 3.3 Aerodynamics

| | |
|---|---|
| Measurement conditions: | Measured with a double chamber intake rig acc. to DIN EN ISO 5801.<br>Normal air density = 1,2 kg/m3; Temperature 23°C +/- 3°C;<br>In the intake and outlet area should not be any solid obstruction within 0,5 m. Motor shaft horizontal.<br>The information is only valid under the specified test conditions and may be changed by the installation conditions. If there are deviations from the standard test conditions, the characteristic values must be checked under the installed conditions. Power consumption of the fan motor when operating at normal voltage is shown. Depending on the operating conditions of the application, the power input may be higher. |

a.) Operation condition:

| |
|---|
| 2.100 1/min at free air flow |

| | | |
|---|---|---|
| Max. free-air flow (Δp = 0 / $\dot{V}$ = max.) | 148 m3/h | |
| Max. static pressure (Δp = max. / $\dot{V}$ =0) | 44 Pa | |

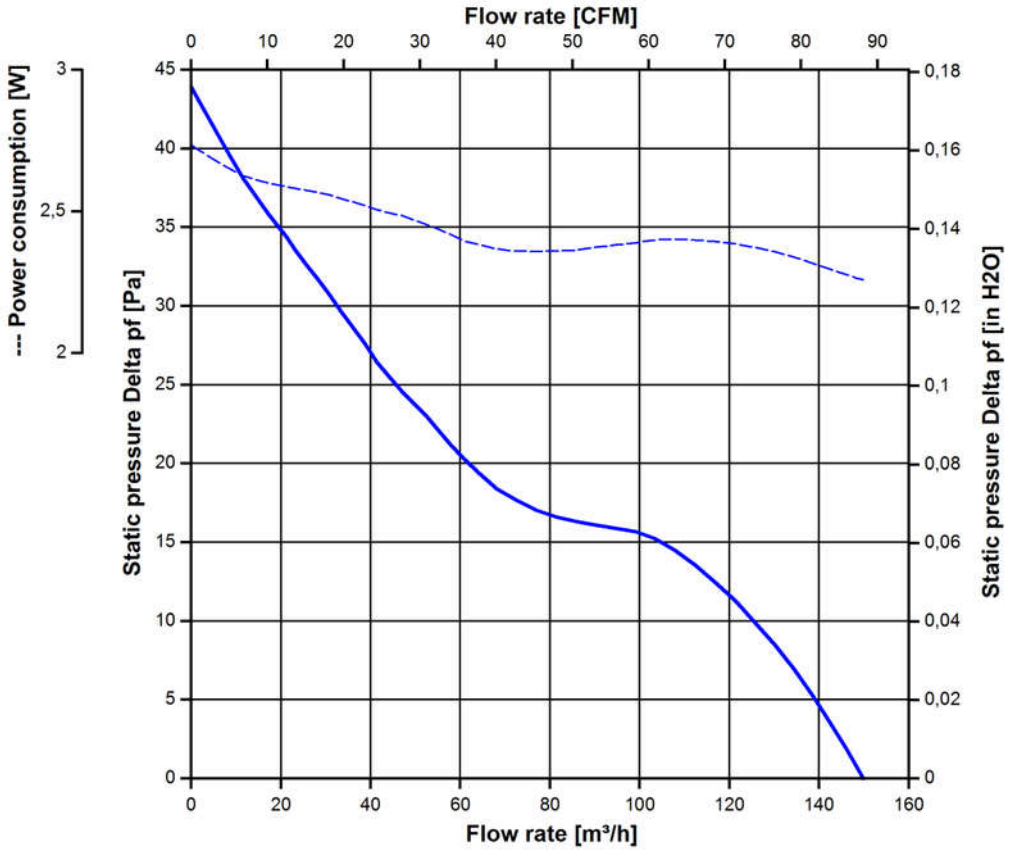

### 3.4 Sound Data

| | |
|---|---|
| Measurement conditions: | Sound pressure level: 1 meter distance between microphone and the air intake.<br>Sound power level: Acc. to DIN 45635 part 38 (ISO 10302)<br>Measured in a semianechoic chamber with a background noise level of Lp(A) < 5 dB(A)<br>For further measurement conditions see chapter aerodynamics. |

a.) Operation condition:

| |
|---|
| 2.100 1/min at free air flow |

| | | |
|---|---|---|
| Optimal operating point | 110 m3/h @ 14 Pa | |
| Sound power level at the optimal operating point | 4,7 bel(A) | |
| Sound pressure level at free air flow, measured in rubber bands | 36 dB(A) | |

## 4 Environment

### 4.1 General

| | | |
|---|---|---|
| Min. permitted ambient temperature TU min. | -20 °C | |
| Max. permitted ambient temperature TU max. | 75 °C | |
| Min. permitted storage temperature TL min. | -40 °C | |
| Max. permitted storage temperature TL max. | 80 °C | |

### 4.2 Climatic Requirements

| | | |
|---|---|---|
| Humidity requirements | humid heat, constant; according to DIN EN 60068-2-78, 14 days | |
| Water exposure | None | |
| Dust requirements | None | |
| Salt fog requirements | None | |

Permitted application area:
The product is intended for use in sheltered rooms with controlled temperature and controlled humidity. Directly exposure to water must be avoided.

Pollution degree 1 (according DIN EN 60664-1)
There is either no pollution or it occurs only dry, non-conductive pollution. The pollution has no negative impact.

### 4.3 Mechanical Requirements

| severity level | Vibration (sinusoidal) | |
|---|---|---|
| 0,5 G | Vibration (sinusoidal) in use<br>IEC 60068-2-6<br>Displacement / frequency range<br>Acceleration / frequency range<br>Sweep rate<br>Sweep cycles<br>Duration<br>Axes of vibration | <br>Vibration (sinusoidal)<br>0,035 mm / 10-60, 60-10 Hz<br>0,5 G / 60-500-60 Hz<br>1 Oct./min<br>10<br>2 hrs.<br>3 |

| severity level | stationary use | | |
|---|---|---|---|
| 1 | storage / transportation | Random vibration not in use<br>IEC 60068-2-64<br>Frequency range / ASD<br><br>$G_{RMS}$<br>Axes of vibration<br>Test duration | <br>Random vibration<br>5 - 20 Hz : 1,0 $m^2 / s^3$<br>20 - 500 Hz : - 3 dB / Oct<br>0,91 G<br>3<br>3 x 5 h |
| | storage / transportation | Bump not in use<br>IEC 60068-2-29<br>Shock spectrum<br>Acceleration<br>Duration<br>Number of bumps (+X, -X, -Y, +Y, -Z, +Z)<br>Total bumps | <br>Bump<br>half sine<br>18 G<br>6 ms<br>100 in each direction<br>600 |
| | stationary use | Random vibration in use<br>IEC 60068-2-64<br>Frequency range / ASD<br><br><br>$G_{RMS}$<br>Axes of vibration<br>Test duration | <br>Random vibration<br>5 - 20 Hz : 2,0 $m^2 / s^3$<br>20- 150 Hz : - 3 dB / Oct<br>0,83 G<br>3<br>3 x 5 h |
| | stationary use | Bump in use<br>IEC 60068-2-29<br>Shock spectrum<br>Acceleration<br>Duration<br>Number of bumps (+X, -X, -Y, +Y, -Z, +Z)<br>Total bumps | <br>Bump<br>half sine<br>5 G<br>11 ms<br>100 in each direction<br>600 |

## 5 Safety

### 5.1 Electrical Safety

| | | |
|---|---|---|
| Dielectric strength<br>DIN EN 62368 and DIN EN 60335<br>A.) Type test<br>Measuring conditions: After 48h of storage at 95% R.H. and 25°C.<br>No arcing or breakdown is allowed!<br>All connections together to ground.<br>B.) Routine test<br>Measuring conditions: At indoor climate.<br>No arcing or breakdown is allowed!<br>All connections together to ground. | 500 VAC / 1 Min.<br><br>Not applicable | |
| Isolation resistance<br>Measuring conditions: After 48h of storage at 95% R.H. and 25°C measured with U=500 VDC for 1 min. | RI > 10 MOhm | |
| Clearance / creepage distance | 1,0 mm / 1,2 mm | |
| Protection class | III | |

### 5.2 Approval Tests

| | | |
|---|---|---|
| CE | EC Declaration of Conformity | Yes |
| EAC | Eurasian Conformity | Yes |
| UL | Underwriters Laboratories | Yes / UL507, Electric Fans E38324 |
| VDE | Association for Electrical, Electronic and Information Technologies | Yes / Approval acc. to EN 62368 - Audio/video, information and communication technology equipment |
| CSA | Canadian Standards Association | Yes / C22.2 No. 113 Fans and Ventilators |
| CCC | China Compulsory Certification | Not applicable |

## 6 Reliability

### 6.1 General

| | | |
|---|---|---|
| Life expectancy L10 at TU = 40 °C | 85.000 h | |
| Life expectancy L10 at TU max. | 32.500 h | |
| Life expectancy L10 acc. to IPC 9591 at TU = 40 °C | 142.500 h | |

The reproduction, distribution and utilization of this document as well as the communication of its contents to others without express authorization is prohibited. Offenders will be held liable for the payment of damages. All rights reserved in the event of the grant of a patent, utility model or design. Refer to protection notice ISO 16016!
Note: In case of multilingual information in this document and in the applicable documents referred to in this document, only the English version shall be authoritative and legally binding in the event of contradictions in content.

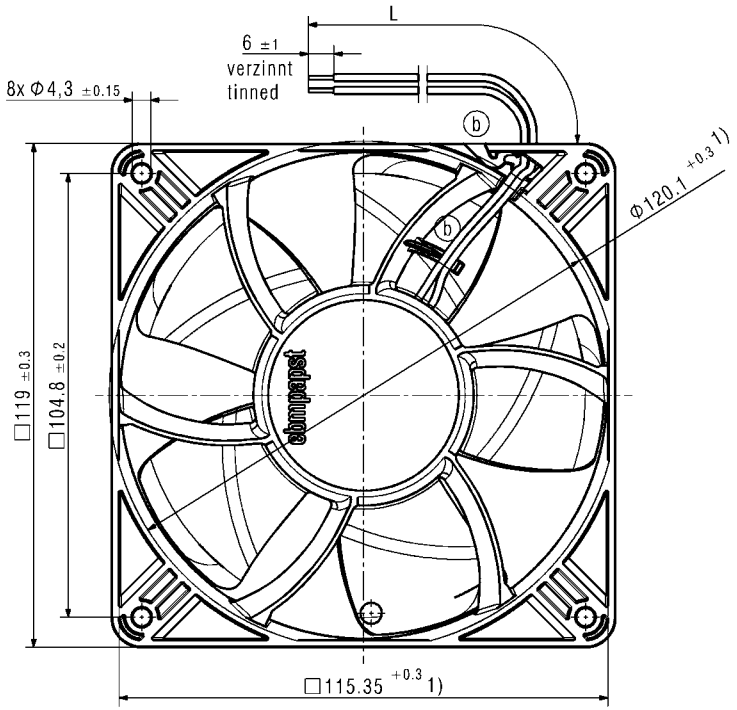


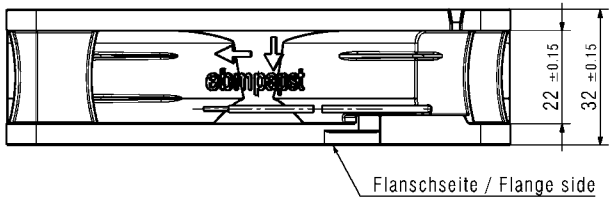


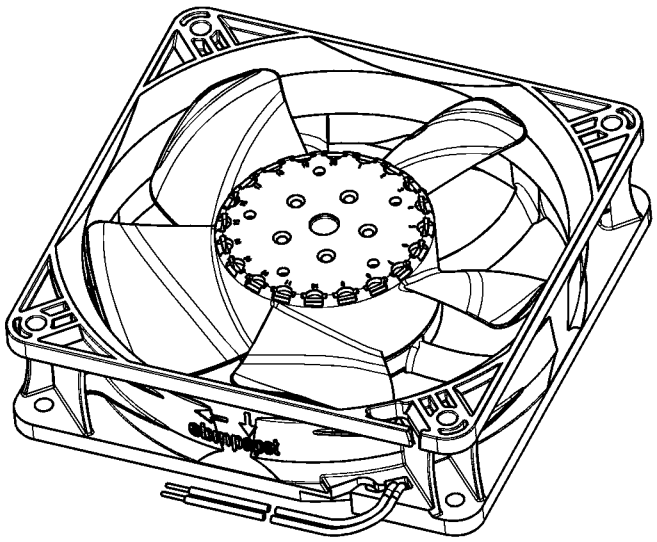


1) Maße für Montagewand / Dimensions for assembly wall

- Kein Axialspiel der Kugellager durch Federausgleich /
  No axial clearance of the ball bearings due to a pre-load spring
- Anzahl und Länge der Litzen siehe Produktspezifikation
  Number and length of the wires see product specification

| | | | | | |
|---|---|---|---|---|---|
| Title | | | | Material | Digital signature |
| First created for | | Index B | Doc type | Sheet | Change-No |
| | | Designed name | | Designed date | Volume [mm³] / CAD environment |
| Substitute for | | Released name | | Released date | Mass [g] / CAD release |
| ebmpapst<br>ebm-papst St. Georgen GmbH & Co. KG | | Tolerances | | General tolerances | 3D-reference model<br>9293510701 CPR 000 D |
| | Scale | Format | Document status | | |