Brand of NTN corporation

Technical data

EXF208

Bearing units



Grey cast housing, radial insert ball bearing with eccentric locking collar, seal with slinger

KIT CONTENT

EX.208.G2, F208

VISUAL (S)

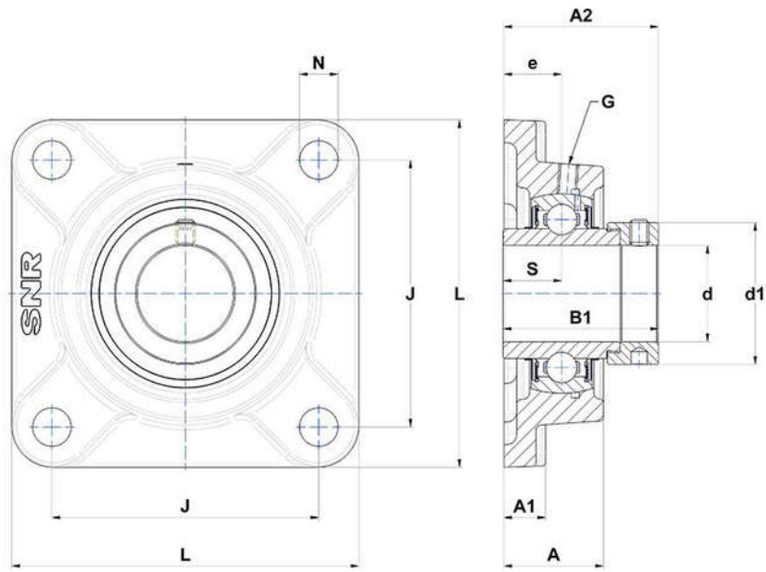

PRODUCT DEFINITION

Brand	SNR
A - Housing height	36 mm
A1 - Housing foot height / flange height	15 mm
A2 - Total height from mounting surface	55,9 mm
B - Width of Inner Ring	42,8 mm
B1 - Overall width Inner Ring	56,3 mm

PRODUCT DEFINITION	
d - Shaft diameter	40 mm
d1 - Outer dia of eccent. Lock. collar / nut of adapter sleeve	58 mm
e - Distance mounting surface to bearing center	21 mm
G - Grease fitting	M6x1
J - Mounting holes distance	102 mm
L - Housing width / diameter	130 mm
N - Mounting hole dimension	16 mm
S - Distance front side/bearing centre	21,4 mm

PRODUCT PERFORMANCE	
C - Dynamic load rating	29600000 mN
C0 - Static load rating	18200000 mN
Operating temperature min.	253,15 °K
Operating temperature max.	373,15 °K

OTHER FEATURES	
Mass	2,03 kg
Recommended tightening torque for set screw	11.5 N-m