E40496

Process adapter clamp DIN 32676 series A

ADAPT DIN32676-A DN100

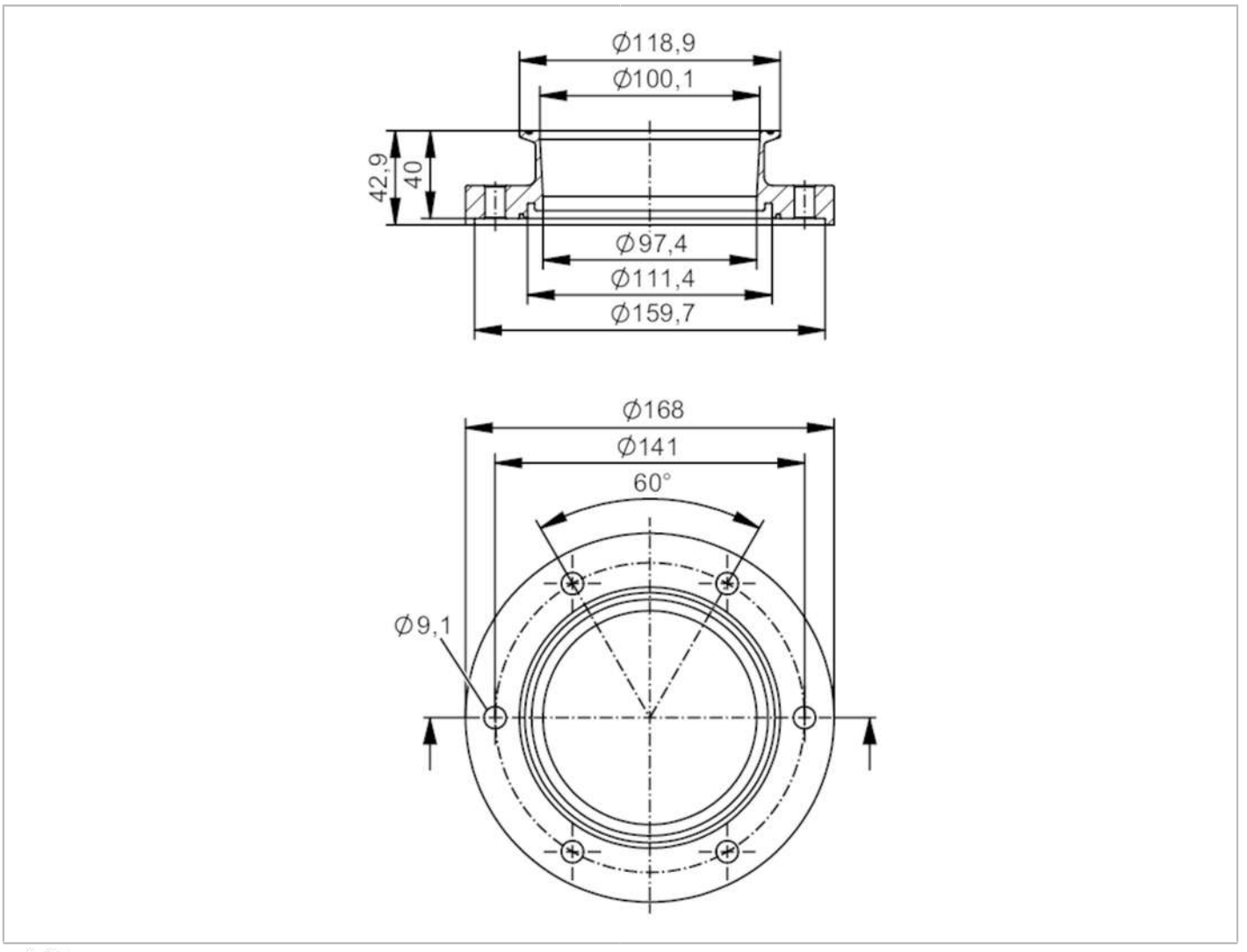

EC 1935/2004 FCM

Application			
Design		for volumetric flow meters SMF	
Application		food and beverage industry; hygienic systems	
Pressure rating		10 bar	1 MPa
Tests / approvals			
Pressure Equipment Directive		A possible classification to PED depends on the application and has to be carried out by the user / operator.	
Safety instructions		The compatibility between medium and product material has to be checked in all applications.	
Mechanical data			
Weight	[g]	4883.8	
Materials		stainless steel (316L/1.4404)	
Nominal diameter		DN100 (4“)	
Sensor connection		ifm-specific device flange	
Process connection		Clamp DIN 32676 series A (ISO)	

E40496

Process adapter clamp DIN 32676 series A

ADAPT DIN32676-A DN100

Process connection suitable for pipe standard	(DIN EN 10357 series A); (DIN 11866 series A); (DIN 11850 series 2)
Surface characteristics Ra/Rz of the wetted parts	Ra ≤ 0.4 µm
Accessories	
Items supplied	screws 12
Remarks	
Pack quantity	2 pcs.