# B64G - Olympian Plus plug-in system Filter/regulator



- Port size: 1/4" ... 3/4" (ISO G/PTF)
- High efficiency water removal
- Diaphragm and balanced valve design ensure good regulation characteristics
- Non-rising adjusting knob has snap-action lock
- Quick release bayonet bowl

## Technical features

**Medium:**
Compressed air only

**Maximum operating pressure:**
17 bar (246 psi)

**Pressure range:**
(standard)
0,3 ... 10 bar (4 ... 145 psi)
(optional)
0,4 ... 4 bar ( 5 ... 58 psi),
0,7 ... 17 bar (10 ... 246 psi)

**Filter element:**
5 or 40 µm

**Port sizes:**
1/4", 3/8", 1/2" or 3/4"

**Gauge port:**
1/8 PTF with PTF main ports
Rc1/8 with ISO G main ports

**Drain:**
Manual or automatic

**Automatic drain conditions:**
Pressure to close drain:
> 0,3 bar (4.3 psi)
Pressure to open drain:
< 0,2 bar (2.9 psi)
Minimum air flow to close drain:
0,6 $dm^3/s$ (1.3 scfm)

**Relieving:**
With (standard)
Non-relieving (optional)

**Bowl size:**
0,2 litre (7 fluid oz)

**Standard compliances:**
II 2G Ex h IIC T6 Gb
II 2D Ex h IIIC T85° Db

**Ambient/Media temperature:**
-20° ... +80°C (-4° ... +176°F)
Version with gauge:
-20° ... +65°C (-4° ... +149°F)
Air supply must be dry enough to avoid ice formation at temperatures below +2°C (+35°F).

**Materials:**
Body and yoke: Zinc alloy
Connection piece: Aluminium
Metal bowl: Aluminium
Prismatic liquid level indicator: Grilamid
Filter element: Sintered plastic
Adjusting knob: Acetal resin
Elastomers: NBR

## Technical data, standard models

| Symbol | Port size | Size | Pressure range (bar) | Filter element (µm) | Flow * ($dm^3/s$) | Bowl | Drain | Weight (kg) | Model |
|---|---|---|---|---|---|---|---|---|---|
| 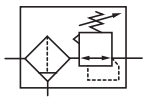 | G1/4 | – | 0,3 ... 10 | 40 | 30 | Metal | Manual | 1,71 | B64G-2GK-MD3-RMN |
| | G3/8 | – | 0,3 ... 10 | 40 | 76 | Metal | Manual | 1,69 | B64G-3GK-MD3-RMN |
| | G1/2 | Basic | 0,3 ... 10 | 40 | 106 | Metal | Manual | 1,66 | B64G-4GK-MD3-RMN |
| | G3/4 | – | 0,3 ... 10 | 40 | 106 | Metal | Manual | 2,02 | B64G-6GK-MD3-RMN |
| | Without yoke | – | 0,3 ... 10 | 40 | | Metal | Manual | 1,24 | B64G-NNK-MD3-RMN |
| 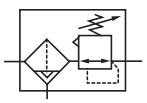 | G1/4 | – | 0,3 ... 10 | 40 | 30 | Metal | Automatic | 1,71 | B64G-2GK-AD3-RMN |
| | G3/8 | – | 0,3 ... 10 | 40 | 76 | Metal | Automatic | 1,69 | B64G-3GK-AD3-RMN |
| | G1/2 | Basic | 0,3 ... 10 | 40 | 106 | Metal | Automatic | 1,66 | B64G-4GK-AD3-RMN |
| | G3/4 | – | 0,3 ... 10 | 40 | 106 | Metal | Automatic | 2,02 | B64G-6GK-AD3-RMN |
| | Without yoke | – | 0,3 ... 10 | 40 | | Metal | Automatic | 1,26 | B64G-NNK-AD3-RMN |

* Typical flow with 10 bar (145 psi) inlet pressure, and 6,3 bar (91 psi) set pressure and 1 bar (14.5 psi) drop from set.


Our policy is one of continued research and development. We therefore reserve the right to amend, without notice, the specifications given in this document. (1998 - 8079e) © 2020 Norgren GmbH

## Option selector

B64G-★★★-★D★-★★★

| Port size | Substitute |
|---|---|
| 1/4" | 2 |
| 3/8 " | 3 |
| 1/2 " | 4 |
| 3/4" | 6 |
| Without yoke | N |

| Threads form | Substitute |
|---|---|
| PTF | A |
| ISO G (standard) | G |
| Without yoke (standard) | N |

| Adjustment | Substitute |
|---|---|
| Knob (standard) | K |
| T-bar (0,7 ... 17 bar) | T *2) |

| Drain | Substitute |
|---|---|
| Automatic | A |
| Manual | M |

| Gauge | Substitute |
|---|---|
| With | G |
| Without (standard) | N |

| Pressure range (bar) *1) | Substitute |
|---|---|
| 0,3 ...10 (standard) | M |
| 0,3 ... 4 | F |
| 0,7 ... 17 | S *2) |

| Diaphragm | Substitute |
|---|---|
| Relieving (standard) | R |
| Non-relieving | N |

| Filter element | Substitute |
|---|---|
| 5 µm | 1 |
| 40 µm (standard) | 3 |

*1) Outlet pressure can be adjusted to pressures in excess of and less than, those specified. Do not use these units to control pressures outside of the specified ranges.

*2) Units with 17 bar (246 psi) outlet pressure range are available only with the T-bar adjustment; therefore substitute T at the 7th digit and S at the 9th position.

## Flow characteristics

Inlet pressure: 10 bar, port size: 1/2", filter element: 40 µm
Pressure range: 0,3 ... 10 bar

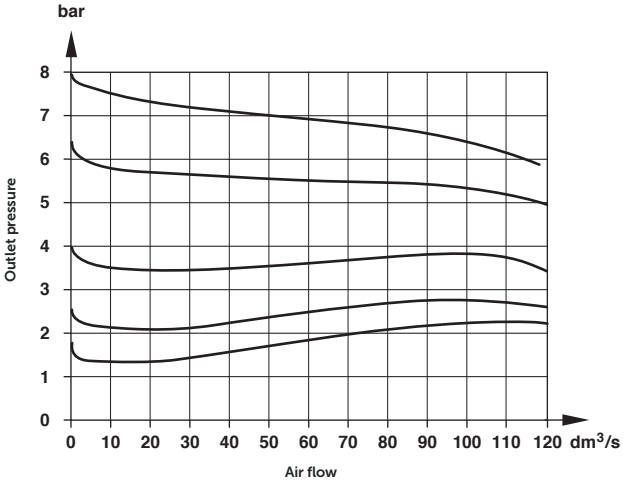


## Regulating characteristics

Port size: 1/2"

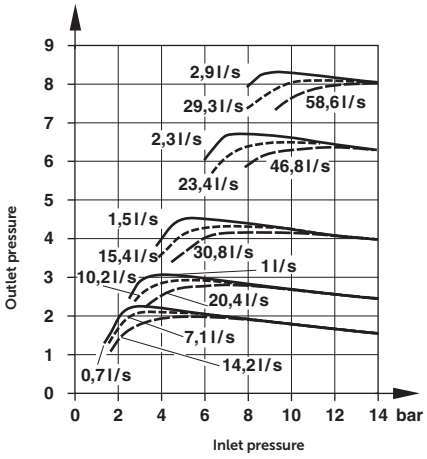



Our policy is one of continued research and development. We therefore reserve the right to amend, without notice, the specifications given in this document. (1998 - 8079e) © 2020 Norgren GmbH

## Accessories, service kit and gauges




## Accessories

| Thread | Models with G-thread Single yoke  5 | Double yoke  | 3/2 Shut-off valve Threaded inlet only  | Threaded outlet only  | End connector kit  2 | Rear entry bracket kit  8 |
|---|---|---|---|---|---|---|
| G1/4 | Y64A-2GA-N1N | Y64A-2GA-N2N | T64T-2GB-P1N | T64T-2GC-P1N | – | – |
| G3/8 | Y64A-3GA-N1N | Y64A-3GA-N2N | T64T-3GB-P1N | T64T-3GC-P1N | – | – |
| G1/2 | Y64A-4GA-N1N | Y64A-4GA-N2N | T64T-4GB-P1N | T64T-4GC-P1N | 74505-50 | – |
| G3/4 | Y64A-6GA-N1N* | Y64A-6GA-N2N* | T64T-6GB-P1N | T64T-6GC-P1N | 74505-53 | 18-026-981 |
| 1/4 PTF | Y64A-2AA-N1N | Y64A-2AA-N2N | T64T-2AB-P1N | T64T-2AC-P1N | – | – |
| 3/8 PTF | Y64A-3AA-N1N | Y64A-3AA-N2N | T64T-3AB-P1N | T64T-3AC-P1N | – | – |
| 1/2 PTF | Y64A-4AA-N1N | Y64A-4AA-N2N | T64T-4AB-P1N | T64T-4AC-P1N | 74505-52 | – |
| 3/4 PTF | Y64A-6AA-N1N* | Y64A-6AA-N2N* | T64T-6AB-P1N | T64T-6AC-P1N | 74505-55 | – |

*These yokes are supplied with two end connenctor kits as standard.

| Bracket mounting  1 | Nut  4 | Tamper resistant cap & seal wire  3 | Yoke connector kit  9 | Porting block  | Padlock with two keys  |
|---|---|---|---|---|---|
| 74504-50 | 74502-89 | 4355-51 | 74503-51 | 74507-50 | 0613633 (brass) |

## Service kit

| Service kit, manual drain  | Service kit, automatic drain  |
|---|---|
| B64G-KITM05R (5 µm) | B64G-KITA05R (5 µm) |
| B64G-KITM40R (40 µm) | B64G-KITA40R (40 µm) |



Our policy is one of continued research and development. We therefore reserve the right to amend, without notice, the specifications given in this document. (1998 - 8079e) © 2020 Norgren GmbH

## Gauges

Center back connection, white face (full technical specification see datasheet 8.900.900)

6



| Pressure range bar *1 | MPa | psi | Ø | Thread size | Model |
|---|---|---|---|---|---|
| 0 ... 4 | 0 ... 0,4 | 0 ... 58 | 50 mm | R1/8 | 18-015-011 |
| 0 ... 10 | 0 ... 1 | 0 ... 145 | 50 mm | R1/8 | 18-015-013 |
| 0 ... 25 | 0 ... 2,5 | 0 ... 362 | 50 mm | R1/8 | 18-015-014 |

*1) primary scale

Center back connection, black face for North America (full technical specification see datasheet 8.900.900)

6



| Pressure range psig *1 | bar | MPa | Ø | Thread size | Model |
|---|---|---|---|---|---|
| 0 ... 60 | 0 ... 4 | 0 ... 0.4 | 2" (50 mm) | 1/8 NPT | 18-015-202 |
| 0 ... 160 | 0 ... 11 | 0 ... 1.1 | 2" (50 mm) | 1/8 NPT | 18-015-204 |
| 0 ... 400 | 0 ... 28 | 0 ... 2.8 | 2" (50 mm) | 1/8 NPT | 18-015-206 |

*1) primary scale

## Basic dimensions

Standard T-bar

Dimensions in mm
Projection/First angle

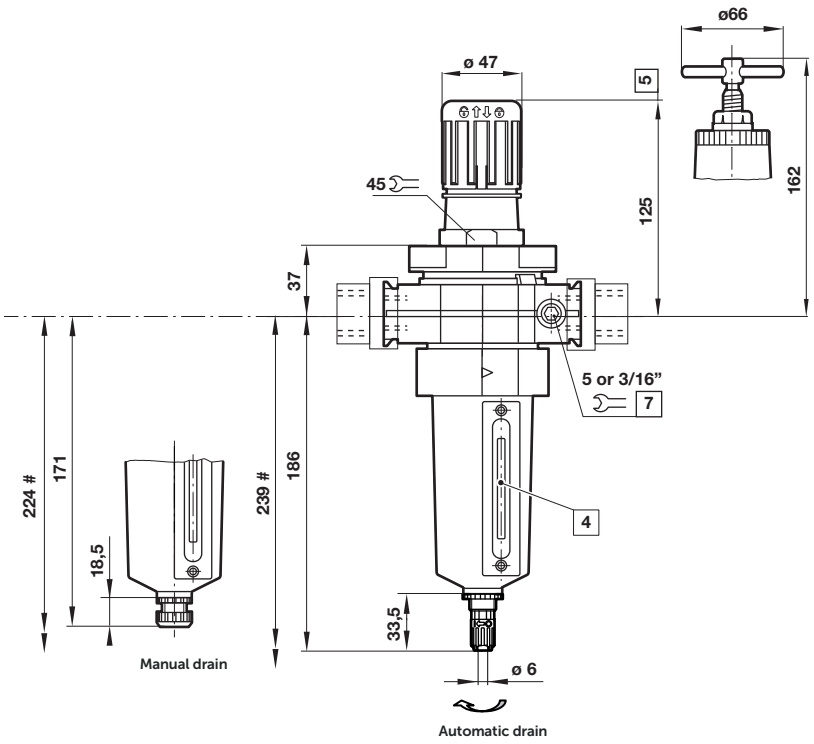


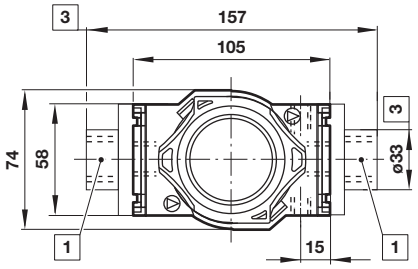


# Minimum clearance required to remove bowl
1 Main ports 1/4", 3/8", 1/2" or 3/4"
3 For main ports 3/4" only
4 Sight glass
5 Reduces by 4 mm with knob in locked position
7 Gauge port 1/8"



Our policy is one of continued research and development. We therefore reserve the right to amend, without notice, the specifications given in this document. (1998 - 8079e) © 2020 Norgren GmbH

## Single yoke with bracket mounting

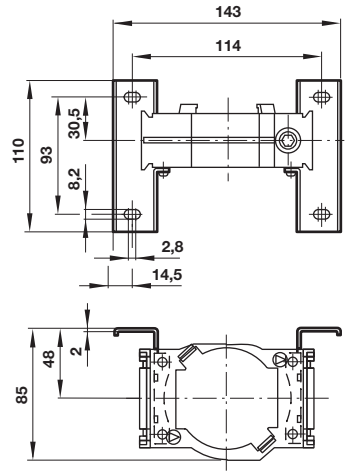


## Double yoke with bracket mounting

Dimensions in mm
Projection/First angle

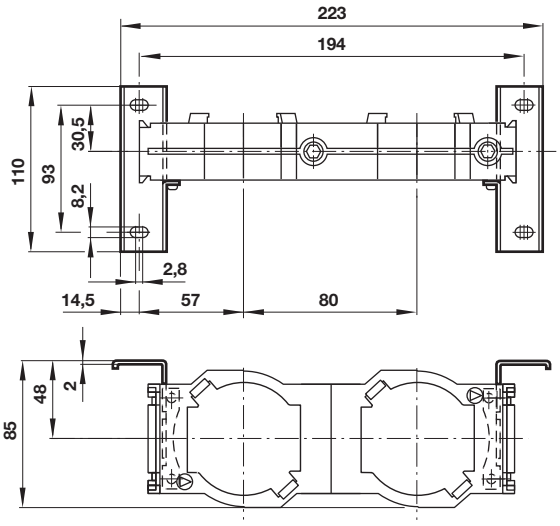


## Rear entry bracket
## 18-026-981

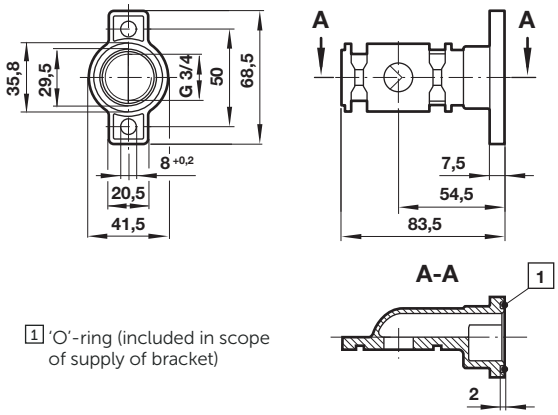


1 'O'-ring (included in scope of supply of bracket)

## Porting block
## 74507-50

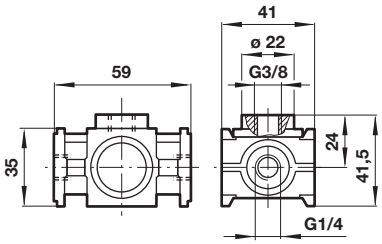


## Adjustable pressure switch
## 4346-99

| | |
|---|---|
| Voltage | 24 V d.c./240 V a.c. |
| Current | 0,5 A (d.c.); 5 A (a.c.) |
| Pressure range | 2 ... 10 bar |
| Repeatabillity | 2% of full set point range at 20°C |
| Average deadband | 0,8 ... 1,7 bar |
| Electrical connection (corresponding to choosen coil) | EN 175301-803 - Form C, 15 mm |
| Degee of protection: | IP65 |
| Adjustable | Standard |
| Material | Body: Aluminium, Elastomers: NBR |

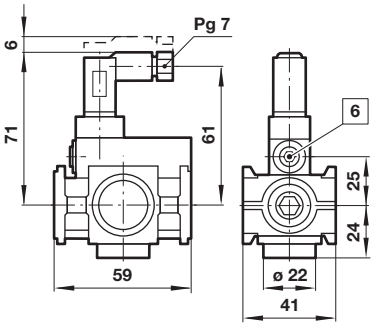


6 Adjusting screw

## 3/2 Shut-off valve

| Symbol | A | B | ø C | Model |
|---|---|---|---|---|
| 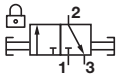 | G1/4 | 48 | 27 | T64T-2G*-P1N |
| | G3/8 | 48 | 27 | T64T-3G*-P1N |
| | G1/2 | 48 | 27 | T64T-4G*-P1N |
| | G3/4 | 51 | 33 | T64T-6G*-P1N |



* B = Threaded inlet only, C = Threaded outlet only

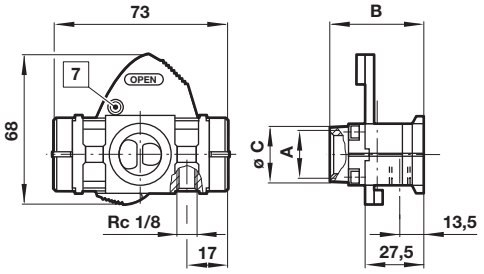


7 Padlock hole ø7,5 mm



Our policy is one of continued research and development. We therefore reserve the right to amend, without notice, the specifications given in this document. (1998 - 8079e) © 2020 Norgren GmbH

## Warning

These products are intended for use in industrial compressed air systems only. Do not use these products where pressures and temperatures can exceed those listed under **»Technical features/ data«.**

Before using these products with fluids other than those specified, for non-industrial applications, life-support systems or other applications not within published specifications, consult Norgren Ltd.

Through misuse, age, or malfunction, components used in fluid power systems can fail in various modes.

The system designer is warned to consider the failure modes of all component parts used in fluid power systems and to provide adequate safeguards to prevent personal injury or damage to equipment in the event of such failure.

System designers must provide a warning to end users in the system instructional manual if protection against a failure mode cannot be adequately provided.

System designers and end users are cautioned to review specific warnings found in instruction sheets packed and shipped with these products.



Our policy is one of continued research and development. We therefore reserve the right to amend, without notice, the specifications given in this document. (1998 - 8079e) © 2020 Norgren GmbH