ASSEMBLED VIEW

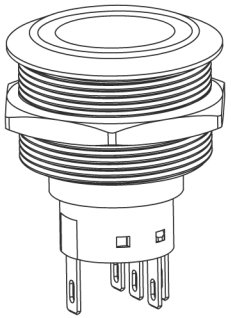

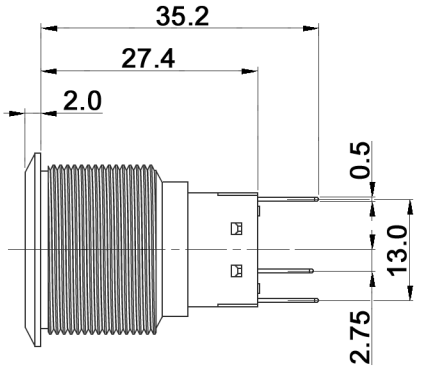

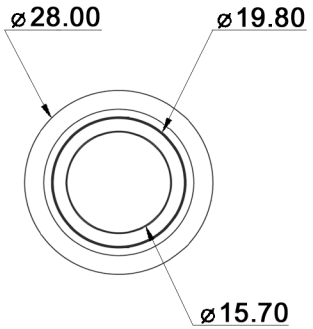

PANEL CUT-OUT

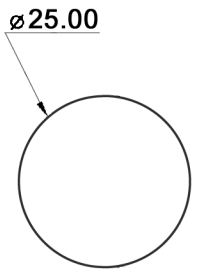

MAX. PANEL THICKNESS: 10mm

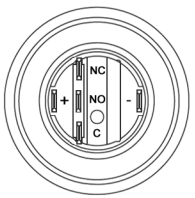

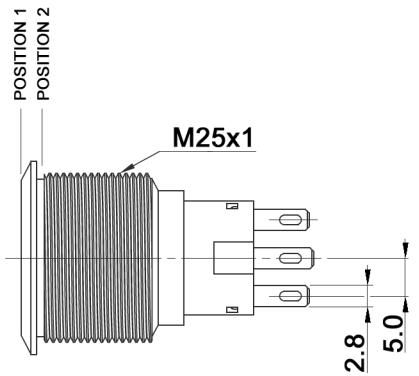

SCHEMATIC

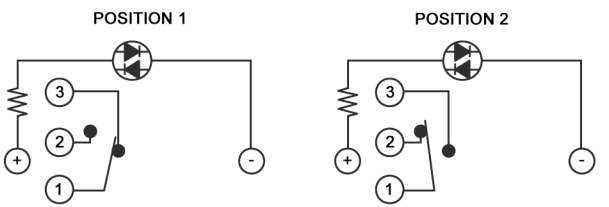

HARDWARE:

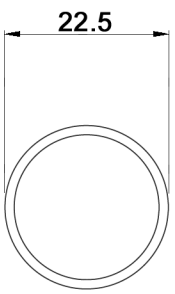

O-RING

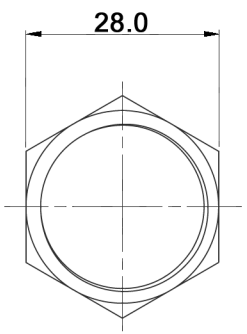

HEX NUT

Compliance: RohS II (2011/65/EU)

Tolerances: 0.00: ±0.25mm 0.0: ±0.40mm			Date 09/15	Name dr	MAV25A0F10E-312-JQ
			knitter-switch	30 34 40	Page 1/2
Specifications	03/16	dr			
Modifications	Date	Name			

Specifications:

Contact rating:	3A, 250V AC; 3A, 28V DC
Contact resistance:	50mOhm max. at 1A, 12V DC
Insulation resistance:	1000MOhm min. at 500V DC
Dielectric strength:	2000V RMS
Operating temperature:	-20°C to +55°C
Mechanical life:	1 000 000 cycles
Electrical life:	50 000 cycles (make and break cycles at full load); 6000 cycles DC
Operating force:	2.5 +/-1N
Switching function:	momentary
Travel:	3.2mm
Torque:	5-14Nm
IP protection:	IP67
IK class:	IK10
LED color:	red
LED voltage:	12V AC
Material:	Bushing: stainless steel
	Base: PBT (UL94V-0), PC (UL94V-2)
	Actuator: PC, stainless steel
	Inner assembly: POM, PA66
	Spring: steel
	O-ring: silicone
	Terminal / contact: copper, silver plated
	Hex nut: brass, nickel plated

Compliance: RohS II (2011/65/EU)

Tolerances: 0.00: ±0.25mm 0.0: ±0.40mm			Date 09/15	Name dr	MAV25A0F10E-312-JQ
			knitter-switch	30 34 40	Page 2/2
Modifications	Date	Name			