Hydraulic Safety group angle body stainless steel

SFR stainless steel

ref. code: 52571





Sticker :

blue = SFR stainless steel

CERTIFIÉ PAR CSTB
NF
ROBINETTERIE
DE RÉGLAGE ET DE SÉCURITÉ

BELGAQUA

- Safety group with valve diaphragm and stainless steel seat.
- Compliant with standards NF EN 1487 (F), BELGAQUA (B).
- The fruit of much work with plumbing contractors and manufacturers of electrical hot water storage heaters, the SFR will be of great interest to professionals and fully meet the most demanding expectations.
- This top-of-the-range safety goup features a stainless steel seat to prevent corrosion from impairing the valve seal. SFR STAINLESS STEEL is recommended especially where water is aggressive, hard or even calcareous.

WATTS INDUSTRIES

A Division of Watts Water Technologies Inc.



Safety group SFR angle body STAINLESS STEEL

Compliant with standards NF EN 1487 (F), BELGAQUA (B).

SFR stainless steel

The fruit of much work with plumbing contractors and manufacturers of hot water storage heaters, the SFR angle body stainless steel will be of great interest to professionals and fully meet the most demanding expectations.
This top-of-the-range safety goup features a stainless steel seat to prevent corrosion from impairing the valve seal. SFR angle body STAINLESS STEEL is recommended especially where water is aggressive, hard or even calcareous.

model	presentation	ref. code
SFR angle body stainless steel 3/4" (20x27)	box	52571

Application:

The hydraulic safety groups are used in domestic water systems to protect hot water storage heaters.
They combine different components with the following functions:
- Safety function to prevent the pressure of the water in the storage heaters reaching dangerous levels.
- Backflow prevention to prevent hot water return into the cold water mains supply – the check-valve can be controlled with a special gauge port.
- A shut-off function to isolate the mains supply for maintenance or inspection of the heater system.
- To drain the hot water storage heater: draining is ensured by the relief valve which can be actuated manually. Once opened pressurised water contained in the hot water storage heater is evacuated.

Advantages:

1. Fast filling rate of more than 4000 L/h under 1 bar.
2. Less head loss, greater convenience for users.
3. Valve knob designed for excellent grip.
4. New valve stainless steel seat limits risk of leaks by efficient clearance of foreign matter.
5. Dimensions make the safety group interchangeable with the major safety groups on the market.
6. Swivelling air gap designed to protect the wall from water splashes regardless of the type of mounting.
7. For hot water storage heaters up to 10 kW maximum useful power.

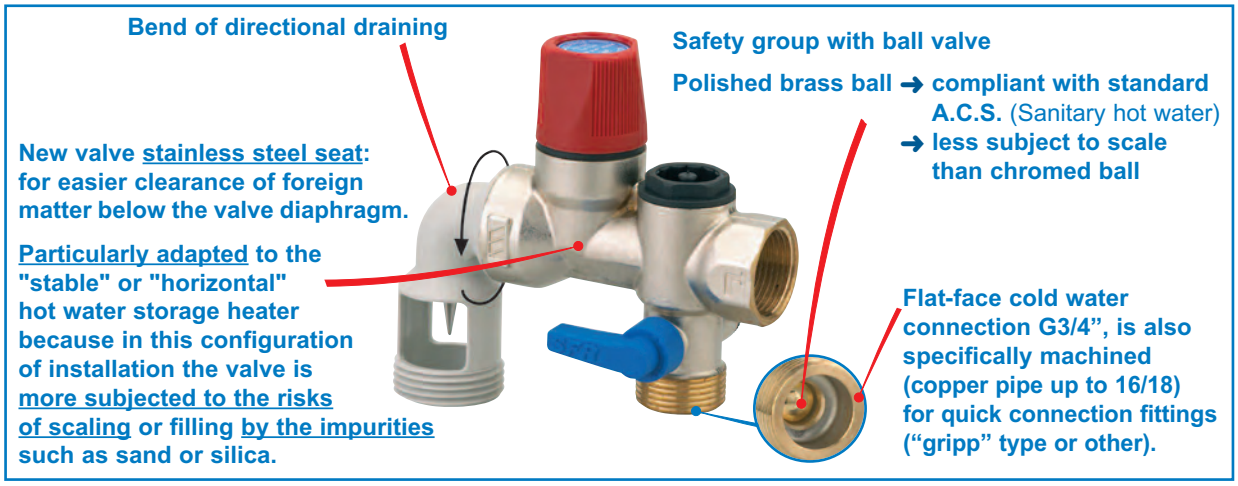

Conception:

❶ Female port, Ø 3/4" 20x27 for mounting on the hot water storage heater with a Dielectric Insulating Connection (WATTS INDUSTRIES "RID").

❷ Check valve inspection port.

❸ Check valve : built into safety group to allow intake of cold water into hot water system and stop return of hot water into the mains.

❹ Quarter-turn isolating ball valve.

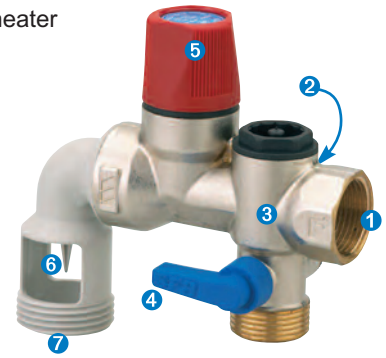

❺ Expansion relief valve: limits pressure in the hot water storage heaters. Set to 7 bar.

Instant opening, "POP" effect, guarantees very high outflow rate.

❻ Water guide : nozzle profile prevents any risk of splashing.

❼ Safety valve discharge port with swivelling air gap. 1" thread (26x34).

Typical Installation:

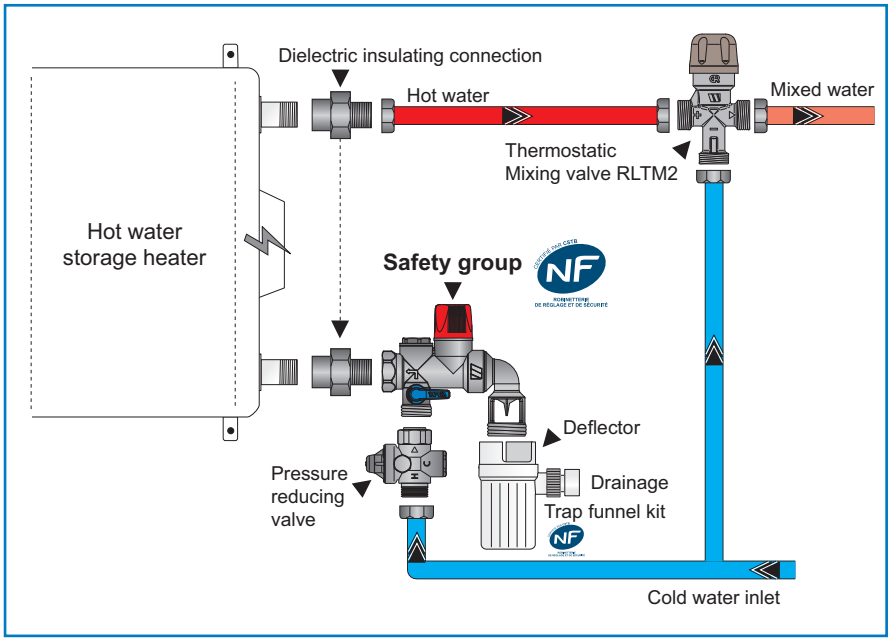

Dimensions (in mm):

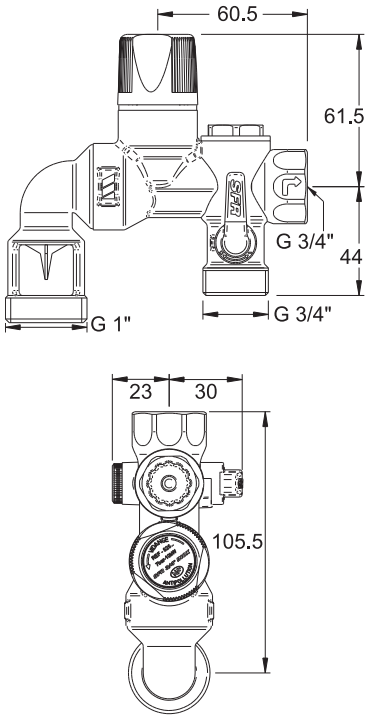

Recommendations / Installation:

Hot water storage heater working normally
The stop valve is in the “open” position and the valve is in the “on” position under normal working.
During heating, pressure rises inside the hot water storage heater and the check valve closes.
When the pressure reaches 7 bar, the safety valve opens slightly and allows some water to escape and this occurs intermittently throughout the heating time.
Exhausting water like this is normal ; it proves that the Safety Group is working correctly.
There is no need for troubleshooting and remedies.

Hot water storage heater working abnormally
The hot water storage heaters thermostat can malfunction and fail to cut off the heat source.
This causes pressure and temperature to rise which lifts the valve in the safety group allowing steam to escape with a characteristic whistle.
You should cut off the hot water storage heater power source immediately and contact the installer who will change the thermostat.
The safety group should be replaced: the temperature of steam at 7 bar is 165°C and could damage the valve seals.

Frost
If you are using your hot water storage heater when there is a risk of frost, it is recommended that you empty it: turn off the power source, close the Safety Group stop valve, open one of the hot water taps of the system and open the drain valve.

Impurities
If the Safety Group keeps on emptying itself, the drain valve should be opened several times to blow off the impurities blocking the seal.

Maintenance
If properly fitted, the safety group needs no maintenance. However, we recommend that the drain valve be opened at least once a month.

Installation
1 - Make sure there is no seal mastic, oakum or other waste preventing its proper working.
2 - Operate the isolating valve and safety valve at least once a month.
3 - The drain pipe should be 25 mm minimum. A suitable tundish/airgap (not supplied) should be fitted. The air gap must be obstruction-free.
4 - If the cold water supply pressure exceeds 3 bar (300 kPa), a pressure reducing valve should be fitted UPSTREAM of the safety group. Please refer to our complete range.
5 - This Safety Group may be fitted to a hot water storage heater of maximum 10 kW working power.
6 - Subject to plumbing regulations.
7 - To prevent the two metal corrosion phenomenon, fitting a dielectric insulating connection (R.I.D.) on piping between the hot water storage heater and the safety group as well as the hot water outlet of the hot water storage heater is recommended. Please refer to our complete range.

SAFETY GROUP SFR ANGLE BODY STAINLESS STEEL

WATTS INDUSTRIES

Pressure drop curve / headloss:

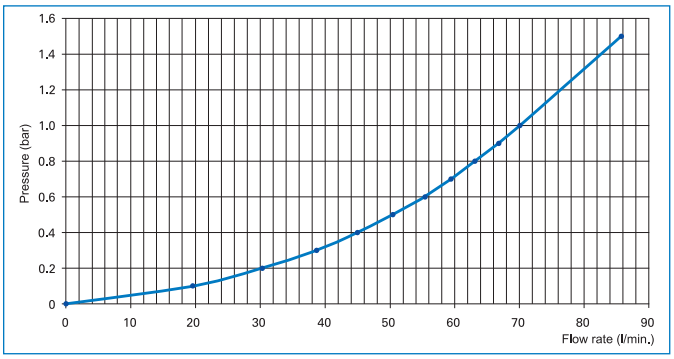

Construction:

description	material
Machined body	Brass CW617N
Ball-valve seal	VIRGIN PTFE
Valve diaphragm	EPDM 70Sh
Valve knob	PA 6
Valve seat	Stainless steel 304L
Air gap	PA 6.6 30% GF
Valve ball	Brass CW614N
Drain plug	POM
Check valve TR20	Grivory HTV
Weight	0,345 kg

SFR the most complete range of hydraulic safety groups in Europe.

	Types of hot water storage heater					
Water qualities	small capacities on or under the sink max. power 4 kW	on vertical stand max. power 10 kW	vertical on the wall max. power 10 kW	horizontal on the wall max. power 10 kW	on horizontal stand max. power 10 kW	horizontal big capacity max. power 18 kW
normal water	SFR NA53M2 1/2" ref. 54310M2  Angle body model ref. 54311M2	SFR 3/4" ref. 52550 		SFR 3/4" stainless steel seat angle body ref. 52571 		GSM 1" angle body ref. 54557 for UK 
hard water	SFR NA53M2 1/2" stainless steel seat ref. 54312M2 	SFR 3/4" PTFE ref. 52560  SFR 3/4" stainless steel seat ref. 52570  SFR Multi group 3/4" stainless steel seat straight or angle body ref. 52573 		SFR 3/4" stainless steel seat angle body ref. 52571 		
aggressive water	 Angle body model 1/2" stainless steel seat ref.54313M2	SFR 3/4" stainless steel seat ref. 52570 	SFR Multi group 3/4" stainless steel seat straight or angle body ref. 52573 	SFR Multi group 3/4" stainless steel seat straight or angle body ref. 52573 		GSM 1" angle body ref. 54555 for France and Belgium.

GSE 3000 - 1/2" 15 mm

EN1488



Complete set for hot water storage heaters DN 1"1/4
max. power 24 kW
ref. 54562 (UK)
or ref. 54560 (F-B)



The photographs, illustrations and descriptions contained in this brochure are given for information only.
Watts Industries reserves the right to change the technical specifications or the design of these products without prior notice.

WATTS INDUSTRIES
A Division of Watts Water Technologies Inc.

WATTS INDUSTRIES France
1590 avenue d'Orange CS 10101 SORGUES
84275 VEDENE cedex - FRANCE
Tel. +33 (0)4 90 33 28 28 - Fax +33 (0)4 90 33 28 29/39
www.wattsindustries.com
E-mail : info@wattsindustries.fr

Re-order no. 53(19)-UK-12/07