Q8 series

Ø8 mm panel mount LED indicators



DISTINCTIVE FEATURES

5 mm colored diffused epoxy lens or 5 mm water clear super bright LEDs

Prominent, recessed and flush bezel styles

(2.8 x 0.8) solder lug/faston terminals, pins or (200 mm long) wire terminations (2.0 x 0.5) solder lug/faston terminals on tri-color versions



ENVIRONMENTAL SPECIFICATIONS

- IP67 sealing option (EN60529)
- Operating & Storage Temperature Range:
  Rear plastic body: -30 °C to +65 °C (–22 °F to +149 °F)
  Rear epoxy body: -40 °C to +85 °C (–40 °F to +185 °F)

GENERAL SPECIFICATIONS

- Max Reverse Voltage: 5 V
- Viewing Angle: 30–100° (dependant on model)
- Life Expectancy: 100,000 hours
- Torque: 20 to 25 cNm
- Maximum panel thickness 7 mm
- Insulation resistance : 4,000 MΩ at 500 VDC

MATERIALS

- Plated brass bezel finished in bright chrome, black or satin grey and molded polycarbonate rear body
- Stainless Steel 316L bezel in flush version only

MOUNTING

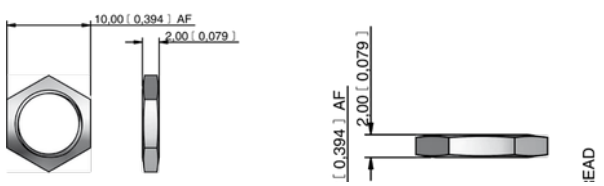

The company reserves the right to change specifications without notice.

All LED characteristics are dependent upon environmental conditions. Therefore published data should be considered nominal and subject to variations.

Q8 series

Ø8 mm panel mount LED indicators

ELECTRICAL SPECIFICATIONS

STANDARD LED INTENSITY

LED COMPONENT SPECIFICATIONS			
	Prominent and Recessed	Flush	Forward Voltage
HE Red	80 mcd	8 mcd	2.0 V
Green	60 mcd	6 mcd	2.2 V
Yellow	50 mcd	6 mcd	2.1 V
Blue	1,600 mcd	150 mcd	3.3 V
White	1,600 mcd	500 mcd	3.3 V
Orange	60 mcd	110 mcd	2.2 V
Bi-color (Typical) (Red/Green)	14/30 mcd	15/10 mcd	2.0V/2.2 V
Tri-color (Typical) (Red/Green/Yellow)	60/15/13 mcd	15/10/6 mcd	2.0 V/2.2 V/2.1 V

Bi-color - The color is changed by reversing the polarity of the supply voltage.
Tri-color - The indicator has red and green LEDs, when both connected yellow is produced.

SUPER BRIGHT LED INTENSITY

LED COMPONENT SPECIFICATIONS			
	Prominent and Recessed	Flush	Forward Voltage
HE Red	5,000 mcd	1,300 mcd	2.2 V
Green	10,000 mcd	1,200 mcd	3.3 V
Yellow	4,000 mcd	1120 mcd	2.1 V
Blue	2,200 mcd	280 mcd	3.3 V
White	2,500 mcd	1560 mcd	3.3 V
Orange	4,000 mcd	500 mcd	2.2 V

HYPER BRIGHT LED INTENSITY

LED COMPONENT SPECIFICATIONS			
	Prominent and Recessed	Flush	Forward Voltage
HE Red	6,000 mcd	980 mcd	2.2 V
Green	1,900 mcd	300 mcd	3.3 V
Yellow	1,600 mcd	1560 mcd	2.0 V
Orange	2,400 mcd	110 mcd	2.2 V

- The operating voltage must not be exceeded by more that 10% as this will result in reduced life expectancy
- Luminous intensity is measured at 20 mA on a discrete led unless otherwise stated.
- Luminous intensities and color shades of white LEDs may vary within a batch.
- Luminous intensity will be reduced with lower operating current.

Voltage	Operating Voltage (Min to Max)	Operating Current (Typical All Types)
02 (No Resistor)*	1.8 to 3.3 VDC	20 mA max
6 VDC	5.4 to 6.6 VDC	20 mA
12 VDC	10.8 to 13.2 VDC	20 mA
24 VDC	21.6 to 26.4 VDC	20 mA
28 VDC	25.2 to 30.8 VDC	20 mA
110 VAC	99 to 121 VAC	6 mA
220 VAC	207 to 235 VAC	3 mA

* Customer to supply resistor for desired operating current.

ADDITIONNAL INFORMATION ON LED COMPONENTS

- Recommended usage:
  - Standard: Homogenous light output that is good for indoor applications.
  - Hyper Bright: Homogenous light output that is good for outside viewing and is daylight visible.
  - Super Bright: A water clear LED that is good for long distance viewing and is daylight visible.

Q8 series

Ø8 mm panel mount LED indicators

BUILD YOUR PART NUMBER

Q _ _ _ _ _

SERIES

Q

MOUNTING HOLE

8	Ø8 mm

BEZEL STYLE

P	Prominent
R	Recessed
F	Flush

TERMINALS

1	Solder Lug/ Fastons (2.8 x 0.8)
2	Pins
3	Wires
4	Rear epoxy Pins
5	Rear epoxy Wires
6	Short body Pins
7	Short body Wires
8	Short body Lug/ Fastons (2.8 x 0.8)
9	Extended short body solder Lug/ Fastons (2.8 x 0.5)

BEZEL FINISH

C	Bright Chrome
B	Black
G	Satin Grey
S	Stainless Steel 316L*

*Flush version only

TYPE OF ILLUMINATION

XX	Fixed Light
KK	Flashing Light (12V – 28VDC)
YY	Bi-color
ZZ	Tri-color

LED COLOR

R	Red
G	Green
Y	Yellow
B	Blue
W	White
O	Orange
HR	Hyper Bright Red
HG	Hyper Bright Green
HY	Hyper Bright Yellow
HO	Hyper Bright Orange
SR	Super Bright Red
SG	Super Bright Green
SY	Super Bright Yellow
SB	Super Bright Blue
SW	Super Bright White
SO	Super Bright Orange
RG	Red/Green
RY	Red/Yellow
GY	Green/Yellow
RYG	Red/Yellow/ Green

VOLTAGE

02	no resistor*
06	6 VDC
12	12 VDC
12A	12 VAC/DC
24	24 VDC
24A	24 VAC/DC
28	28 VDC
28A	28 VAC/DC
110	110 VAC
220	220 VAC

* please refer to the forward voltage in electrical specifications

SEALING

(Blank)	Unsealed
E	IP67

ABOUT THIS SERIES

Notice: please note that not all combinations of above numbers are available.

- Gold faston terminal denotes anode (+), silver terminal denotes cathode (-)
- Standard wire length is 200 mm, 24 AWG UL1061, red wire denotes anode (+), black wire denotes cathode (-) for other wire lengths consult APEM
- 110 VAC and 220 VAC, only available with terminal options 1, 3 and 5
- Terminal options 2,4,6,8 & 9 are only available without integral resistor. Tri-color not available with terminal 9
- Bi-color leds, by connecting the gold faston (+) one color is produced, by reversing the supply voltage another color is produced – bi-colors are available up to 28 VDC [AC products not available]
- Take care when soldering to the faston terminals (recommended solder temperature 300 °C - 3 sec)
- We recommend using hyperbright or superbright leds for use at 110 VAC and 220 VAC
- Mains voltage product is not recommended for use on 3 phase appliances
- The tri-color led has red and green leds when both are connected yellow is produced
- Standard tri-color faston terminals are two anodes (+) and one cathode (-)
- Tri-color wires are one red (+) and one green (+) anode and one black (-) cathode
- Tri-color pins are center (–) cathode, shortest (+) anode pin green, longest (+) anode pin red

Q8 series

Ø8 mm panel mount LED indicators

PROMINENT BEZEL



SOLDER LUG/FASTON

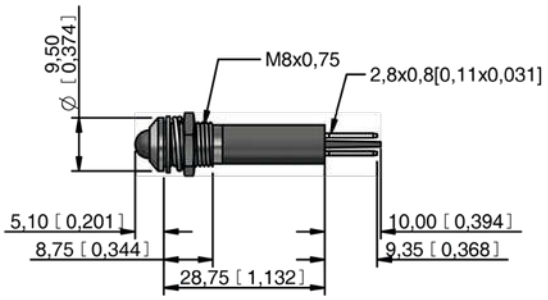

WIRES

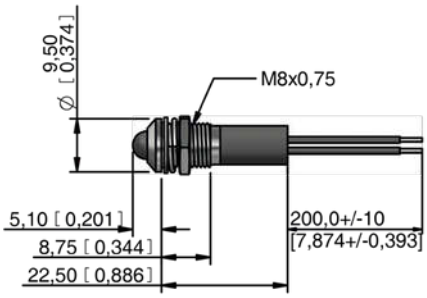

PINS

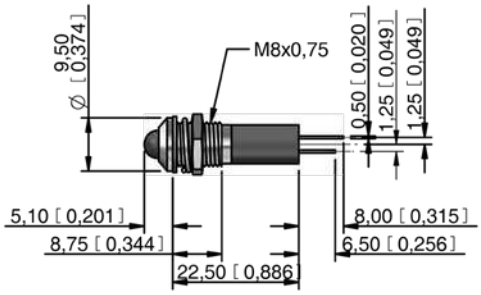

REAR EPOXY WIRES

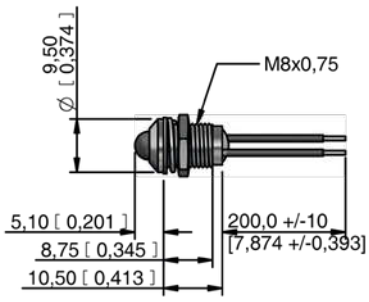

REAR EPOXY PINS

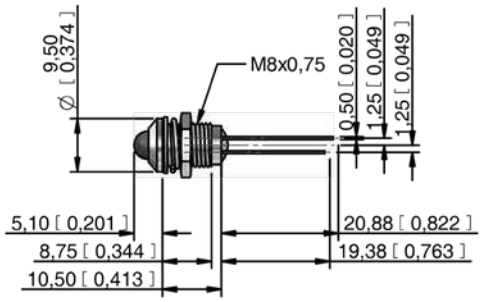

SHORT BODY WIRES

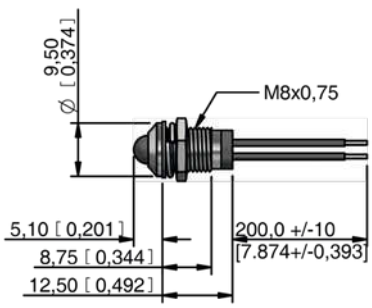

SHORT BODY PINS

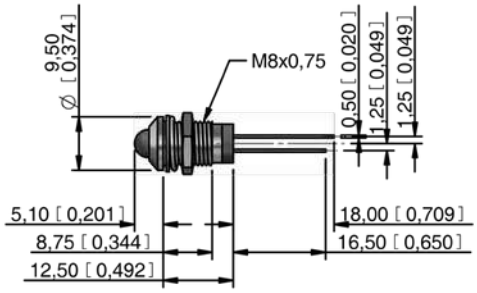

Q8 series

Ø8 mm panel mount LED indicators

PROMINENT BEZEL (CONTINUED)

SHORT BODY SOLDER LUG/FASTONS

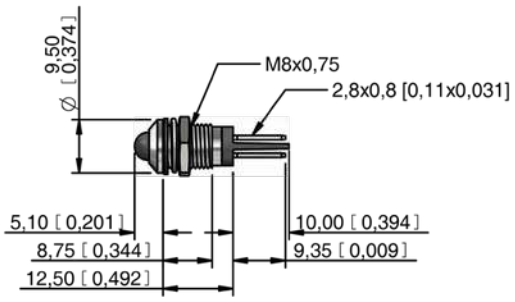

EXTENDED SHORT BODY SOLDER LUG/FASTONS

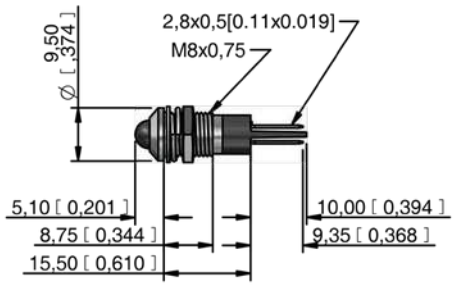

FLUSH BEZEL



SOLDER LUG/FASTON

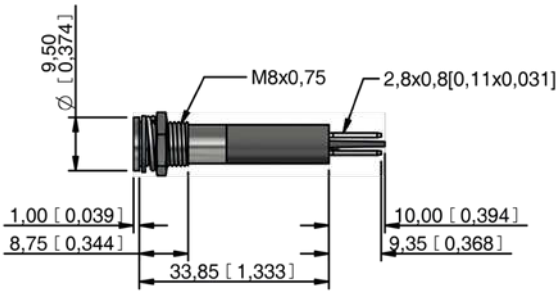

WIRES

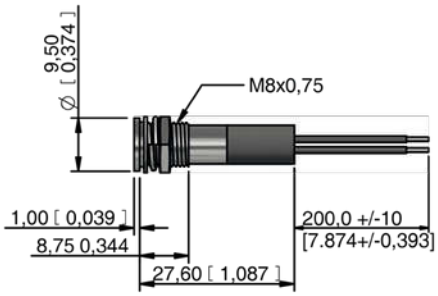

PINS

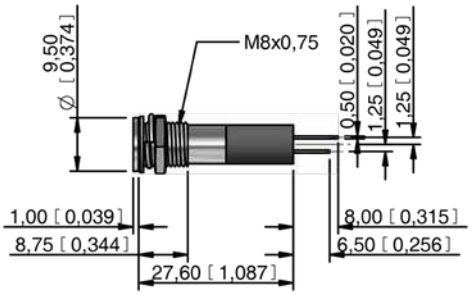

REAR EPOXY WIRES

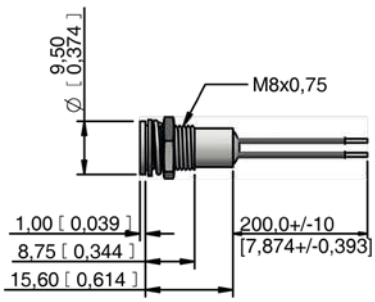

REAR EPOXY PINS

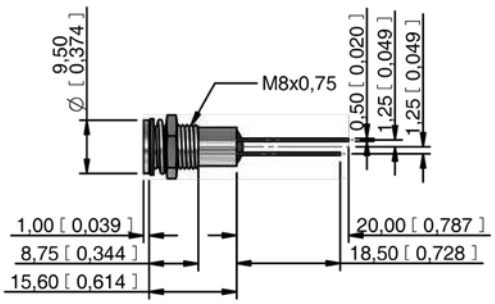

Q8 series

Ø8 mm panel mount LED indicators

FLUSH BEZEL (CONTINUED)

SHORT BODY WIRES

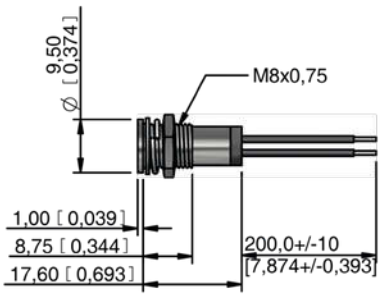

SHORT BODY SOLDER LUG/FASTONS

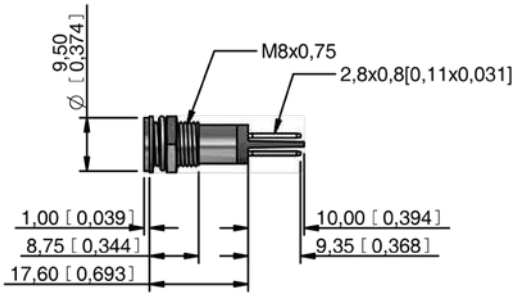

RECESSED BEZEL



WIRES

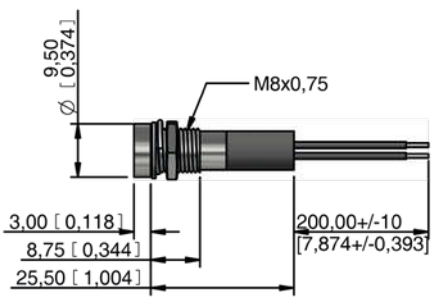

SHORT BODY PINS

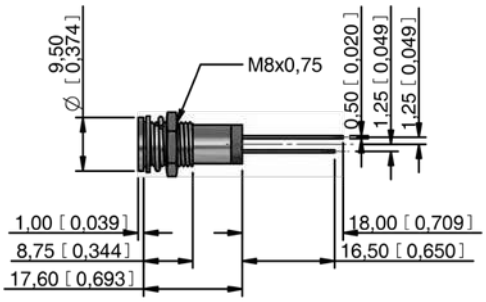

EXTENDED SHORT BODY SOLDER LUG/FASTONS

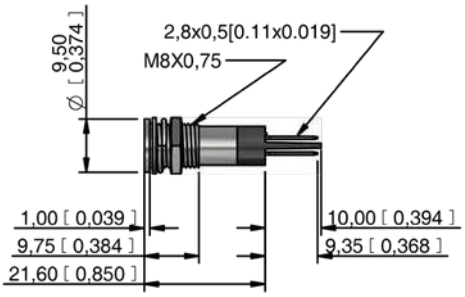

SOLDER LUG/FASTON

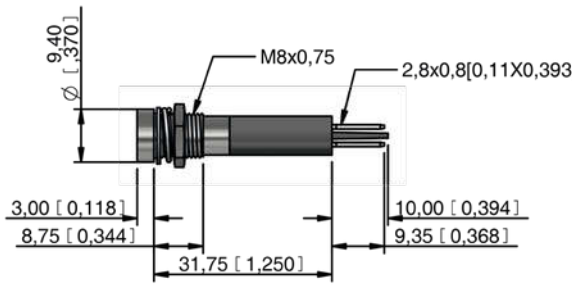

PINS

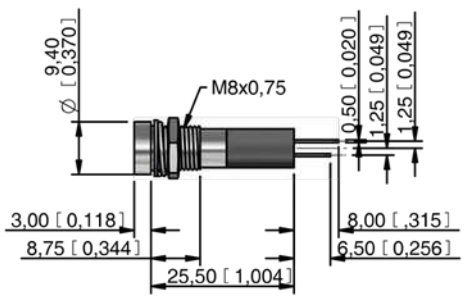

Q8 series

Ø8 mm panel mount LED indicators

RECESSED BEZEL (CONTINUED)

REAR EPOXY WIRES

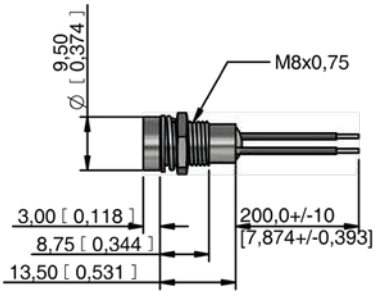

SHORT BODY WIRES

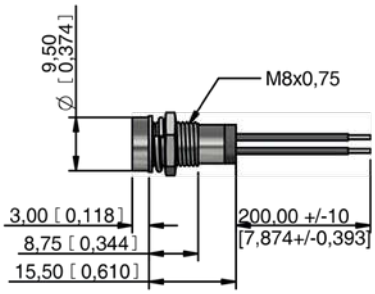

SHORT BODY SOLDER LUG/FASTONS

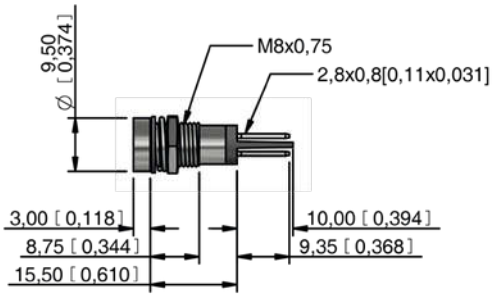

REAR EPOXY PINS

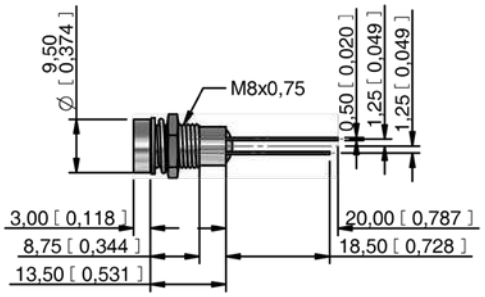

SHORT BODY PINS

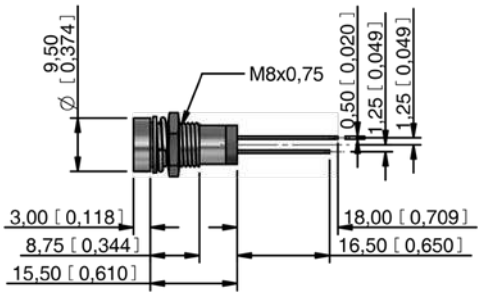

EXTENDED SHORT BODY SOLDER LUG/FASTONS

