MN202S

Magnetically coded sensor

MN14005-AKOG/AS

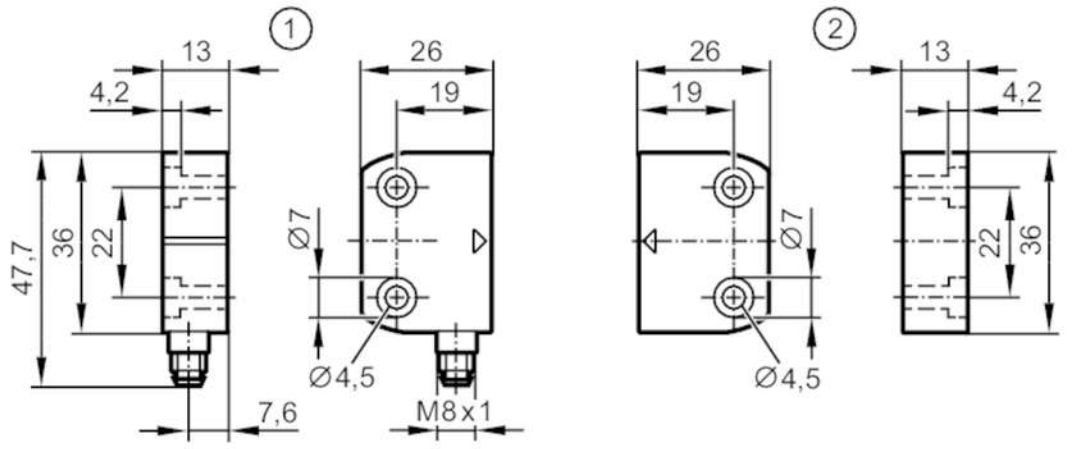

1 sensor
2 coded target

Product characteristics		
Output function		2 x normally open; (potential-free)
Sensing range	[mm]	5; (with defined actuator)
Housing		rectangular
Dimensions	[mm]	36 x 13 x 26
Application		
Design		coded target
Type of operation		permanent operation
Electrical data		
Operating voltage	[V]	24 DC
Rated insulation voltage	[V]	60
Protection class		III
Reverse polarity protection		no
Internal resistance (Ri)	[Ω]	10; (1 W)
Outputs		
Output function		2 x normally open; (potential-free)
Permanent current rating of switching output DC	[mA]	50
Switching frequency DC	[Hz]	150
Output data		Interface type A
Short-circuit proof		no
Max. capacitive load CL_max	[nF]	20
Detection zone		
Sensing range	[mm]	5; (with defined actuator)
Safe switching-off distance s(ar)	[mm]	15

MN202S

Magnetically coded sensor

MN14005-AKOG/AS

Response times			
Response time to safety request	[ms]	10	
Max. fall time	[ms]	0.1	
Max. make time incl. bounce	[ms]	0.6	
Operating conditions			
Applications		class C to EN 60654-1 weatherproof application	
Ambient temperature	[°C]	-25...80	
Note on ambient temperature		operational life ≤ 87600 h	
Ambient temperature	[°C]	10...40	
Note on ambient temperature		operational life ≤ 175200 h	
Max. relative air humidity	[%]	briefly: 5...95 %; permanent: 5...70 %	
Air pressure	[kPa]	80...106	
Max. height above sea level	[m]	2000	
Salt spray		no	
Protection		IP 67; IP 69K	
Tests / approvals			
EMC		IEC 60947-5-1	
Shock resistance		EN 60068-2-27	30 g (11 ms)
Vibration resistance		IEC 60068-2-6	10 g (10...55 Hz)
Safety classification			
Mission time TM	[h]	≤ 175200	
Mission time TM (additional indication)		20 years	
B10D		20.000.000; (without load; at max. load DC 12, 24 V, 50 mA: 400.000)	
Mechanical data			
Weight	[g]	114.5	
Housing		rectangular	
Mounting		non-flush mountable	
Dimensions	[mm]	36 x 13 x 26	
Materials		PA	
Tightening torque	[Nm]	0.8...2	
Accessories			
Items supplied		coded target cover caps: 4	
Remarks			
Remarks		In connection with a G150xS / AC4x2S type evaluation unit, it is possible to reach up to PL e (ISO 13849-1) or SIL cl 3 (IEC 62061)	
Pack quantity		1 pcs.	

MN202S

Magnetically coded sensor

MN14005-AKOG/AS

Electrical connection - plug

Connector: 1 x M8; coding: A



Connection

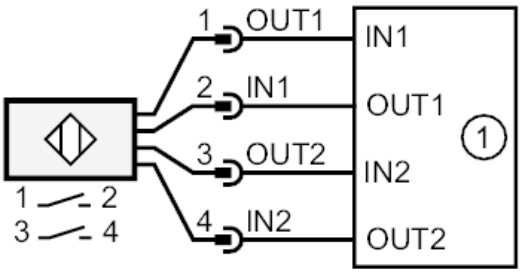

1: safety-related logic unit