

Main switch, 3-pole, 32A, Emergency-Stop function, lockable in the 0 (Off) position, surface mounting, hard knockout version, with mounting plate screen

Part no. P1-32/I2H/MBS/SVB
Article no. 182417

Delivery programme

Product range			Main switch maintenance switch Repair switch
Part group reference			P1
STOPP-Funktion			Emergency switching off function
			With red rotary handle and yellow locking ring
Notes			hard knockout version with assembly sheet screen
Information about equipment supplied			Auxiliary contact or neutral conductor fitted by user.
Number of poles			3 pole
Auxiliary contacts			
		N/O	0
		N/C	0
Locking facility			Lockable in the 0 (Off) position
Degree of Protection			IP65
			totally insulated
Design			surface mounting
			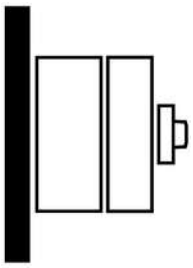
Contact sequence			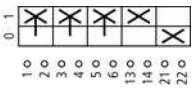
Function			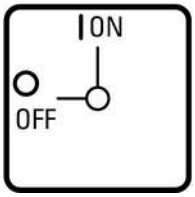
Motor rating AC-23A, 50 - 60 Hz			
400 V	P	kW	15
Rated uninterrupted current	I_u	A	32

Technical data

General

Standards			IEC/EN 60947, VDE 0660, IEC/EN 60204 Switch-disconnector according to IEC/EN 60947-3
Climatic proofing			Damp heat, constant, to IEC 60068-2-78 Damp heat, cyclic, to IEC 60068-2-30
Ambient temperature			

Enclosed		°C	-20 - +40
Overvoltage category/pollution degree			III/3
Rated impulse withstand voltage	U_{imp}	V AC	6000
Mechanical shock resistance		g	15
Mounting position			As required
Protection against direct contact when actuated from front (EN 50274)			Finger and back-of-hand proof

Contacts

Mechanical variables			
Number of poles			3 pole
Auxiliary contacts			
		N/O	0
		N/C	0
Electrical characteristics			
Rated operational voltage	U_e	V AC	690
Rated uninterrupted current	I_u	A	32
Note on rated uninterrupted current $!_u$			Rated uninterrupted current Iu is specified for max. cross-section.
Load rating with intermittent operation, class 12			
AB 25 % DF		x I_e	2
AB 40 % DF		x I_e	1.6
AB 60 % DF		x I_e	1.3
Short-circuit rating			
Fuse		A gG/gL	50
Rated short-time withstand current (1 s current)	I_{cw}	A_{rms}	640
Note on rated short-time withstand current Icw			Current for a time of 1 second
Rated conditional short-circuit current	Iq	kA	80

Switching capacity

cos φ rated making capacity as per IEC 60947-3		A	320
Rated breaking capacity cos φ to IEC 60947-3		A	
230 V		A	260
400/415 V		A	300
500 V		A	290
690 V		A	250
Safe isolation to EN 61140			
between the contacts		V AC	440
Current heat loss per contact at I_e		W	1.8
Lifespan, mechanical	Operations	x 10^6	> 0.3
Maximum operating frequency	Operations/h		1200
AC			
AC-3			
Rating, motor load switch	P	kW	
220 V 230 V	P	kW	7.5
400 V 415 V	P	kW	13
500 V	P	kW	18.5
690 V	P	kW	15
Rated operational current motor load switch			
230 V	I_e	A	26.4
400V 415 V	I_e	A	26.4
500 V	I_e	A	23.4
690 V	I_e	A	14.7
AC-21A			
Rated operational current switch			
440 V	I_e	A	32
AC-23A			
Motor rating AC-23A, 50 - 60 Hz	P	kW	

230 V	P	kW	7.5
400 V 415 V	P	kW	15
500 V	P	kW	18.5
690 V	P	kW	15
Rated operational current motor load switch			
230 V	I_e	A	32
400 V 415 V	I_e	A	32
500 V	I_e	A	30
690 V	I_e	A	19.8
DC			
DC-1, Load-break switches L/R = 1 ms			
Rated operational current	I_e	A	32
Voltage per contact pair in series		V	60
DC-23A, motor load switch L/R = 15 ms			
24 V			
Rated operational current	I_e	A	25
Contacts		Quantity	1
48 V			
Rated operational current	I_e	A	25
Contacts		Quantity	2
60 V			
Rated operational current	I_e	A	25
Contacts		Quantity	2
120 V			
Rated operational current	I_e	A	12
Contacts		Quantity	3
Control circuit reliability at 24 V DC, 10 mA	Fault probability	H_F	$< 10^{-5}$, < 1 fault in 100000 operations

Terminal capacities

Solid or stranded		mm^2	1 x (1,5 - 6) 2 x (1,5 - 6)
Flexible with ferrules to DIN 46228		mm^2	1 x (1 - 4) 2 x (1 - 4)
Terminal screw			M4
Max. tightening torque		Nm	1.6

Technical safety parameters:

Notes			$B10_d$ values as per EN ISO 13849-1, table C1

Approbierte Leistungsdaten

Terminal capacity			
Terminal screw			M4

Approvals

			UL 508; CSA-C22.2 No. 14-05; CSA-C22.2 No. 94; IEC/EN 60947-3; CE marking
			E36332
			NLRV
			12528
			3211-05
			UL listed, CSA certified
			Branch circuits, suitable as motor disconnect
			IEC: IP65; UL/CSA Type 1, 12

Dimensions

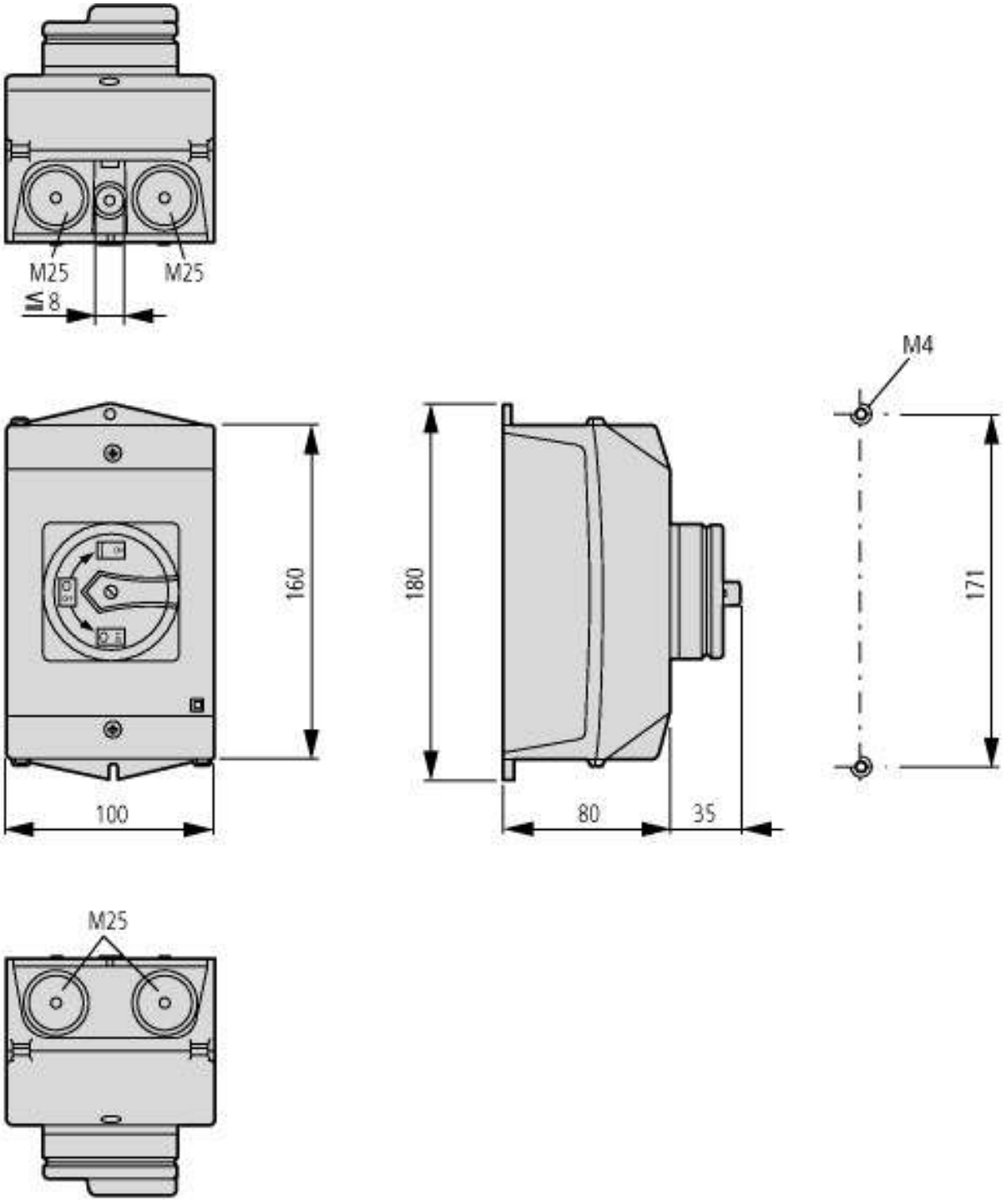

Additional product information (links)

IL03802001Z (AWA1150-1689) Switch-disconnectors in enclosure	
IL03802001Z (AWA1150-1689) Switch-disconnectors in enclosure	ftp://ftp.moeller.net/DOCUMENTATION/AWA_INSTRUCTIONS/IL03802001Z2015_08.pdf
IL03801013Z (AWA1150-2249) Sheet screen mounting	
IL03801013Z (AWA1150-2249) Sheet screen mounting	ftp://ftp.moeller.net/DOCUMENTATION/AWA_INSTRUCTIONS/IL03801013Z2014_07.pdf
Technical overview cam switch, switch-disconnector	http://de.ecat.moeller.net/flip-cat/?edition=HPLTEv1&startpage=4.2
System overview cam switch T	http://de.ecat.moeller.net/flip-cat/?edition=HPLTEv1&startpage=4.4
System overview switch-disconnector P	http://de.ecat.moeller.net/flip-cat/?edition=HPLTEv1&startpage=4.6
Key to part numbers Cam switch	http://de.ecat.moeller.net/flip-cat/?edition=HPLTEv1&startpage=4.8
Key to part numbers Switch-disconnector	http://de.ecat.moeller.net/flip-cat/?edition=HPLTEv1&startpage=4.8
Switches for ATEX	http://www.coopercrouse-hinds.eu/en/products/25-ex-safety-and-main-current-switches.html

© 03/2016 by Eaton Industries GmbH