SCHAEFFLER

Angular contact ball bearings

7006-B-XL-2RS-TVP (Series 70..-B-2RS)

contact angle α = 40°, lip seals on both sides

The datasheet is only an overview of dimensions and basic load ratings of the selected product. Please always observe all the guidelines in these overview pages. Further information is given on many products under the menu item "Description". You can also order comprehensive information via the Catalogue selection system (https://www.schaeffler.de/content.schaeffler.de/en/news_media/index.jsp) or by telephone on +49 (91 32) 82 - 28 97.

d	30	mm
D	55	mm
B	13	mm
a	24	mm
D_1	47,1	mm
D_2	47,7	mm
d_2	38	mm
D_3	51,9	mm
$D_{a\ max}$	50,4	mm
$d_{a\ min}$	34,6	mm
$D_{b\ max}$	51,8	mm
$r_{1\ min}$	0,6	mm

$r_{a1\ max}$	0,6 mm	
$r_{a\ max}$	1 mm	
r_{min}	1 mm	
α	40 °	Contact angle

m	0,109 kg	Mass
C_r	19900 N	Basic dynamic load rating, radial
C_{0r}	13400 N	Basic static load rating, radial
C_{ur}	930 N	Fatigue limit load, radial
n_G	6500 1/min	Limiting speed

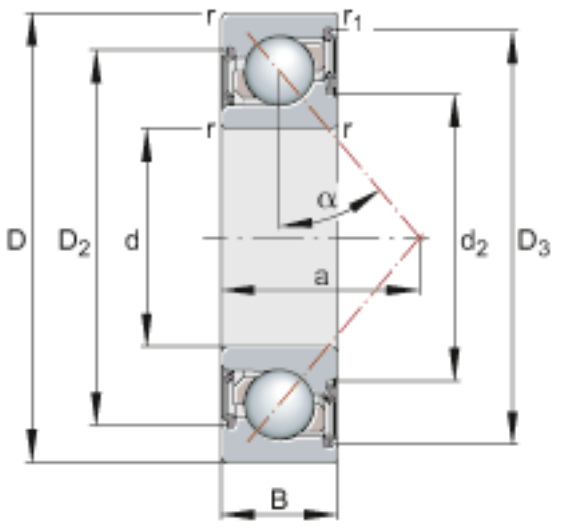

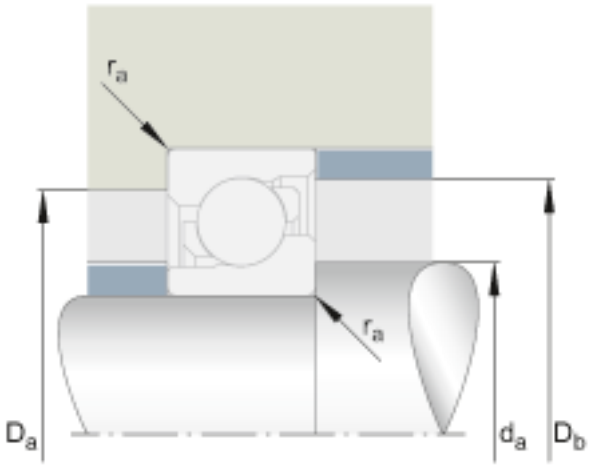
r_a
r_a
D_a
d_a
D_b

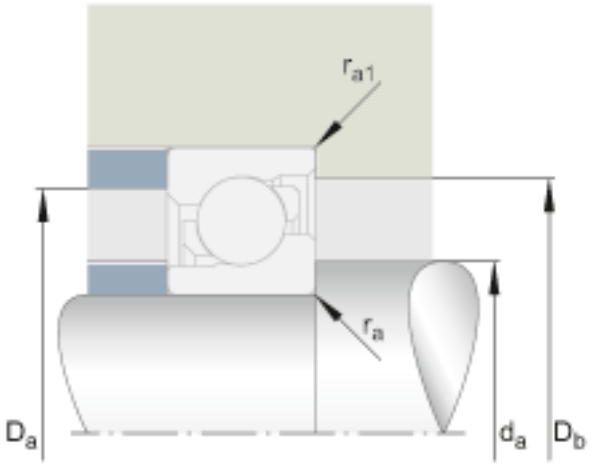
r_{a1}
r_a
D_a
d_a
D_b