E1104S

Magnetically coded target

DEFINED TARGET MN5xxS

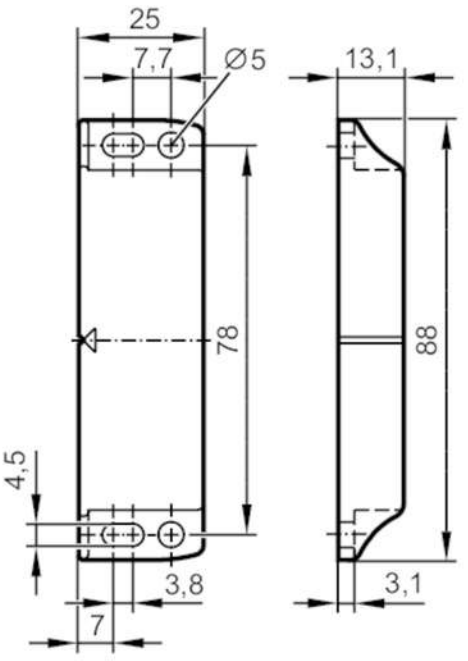

Application		
Installation		for magnetic sensor MN5
Mechanical data		
Weight	[g]	81
Dimensions	[mm]	88 x 13.1 x 25
Materials		PA
Tightening torque	[Nm]	0.8...2
Remarks		
Pack quantity		1 pcs.