Spanners and sockets



Spanners and sockets

Interference fits on tapered shafts

Bearings mounted on tapered seatings achieve their interference fit by being driven up the tapered shaft. Care should be taken to ensure the bearing is not driven up too far, as all the internal clearance may be removed and damage to the bearing is possible.

Incorrect mounting

Bearing driven up too far and all clearance removed; damage possible.

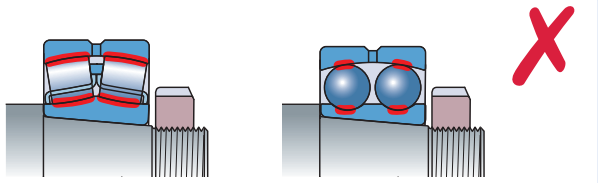

Correct mounting

Bearing driven up the correct distance and the right clearance is achieved.

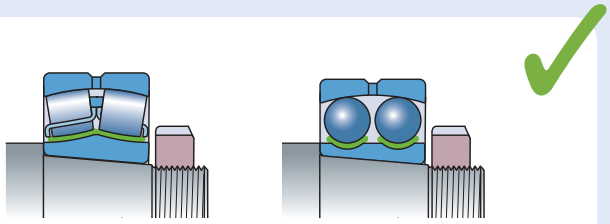

The comprehensive range of SKF spanner and sockets are used to tighten and loosen many types and sizes of bearing lock nuts, for bearings mounted directly on a shaft or on sleeves.



Exact spanner radius reduces the risk of nut damage

SKF Hook Spanners HN series

- Minimises the risk of shaft and nut damage
- Plastic handle is oil, grease and dirt resistant to provide a better grip
- The plastic handle minimises direct metal to skin contact, reducing the risk of corrosion in the handle area
- Spanner designation is laser-engraved allowing for easy identification and selection
- Available as a set: SKF HN 4-16/SET containing 9 spanners for lock nut sizes 4 up to 16

Contents SKF HN 4-16/SET

HN 4	HN 8-9	HN 14
HN 5-6	HN 10-11	HN 15
HN 7	HN 12-13	HN 16

Selection chart – HN series

Designation	Suitable for the following series of SKF lock nuts						
	KM	N	AN	KMK	KMFE	KMT	DIN 1804 (M)
HN 0	0	0		0			M6×0,75, M8×1
HN 1	1	1		1			
HN 2-3	2, 3	2, 3		2, 3		0	M10×1, M12×1,5
HN 4	4	4		4	4	1, 2	M14×1,5, M16×1,5
HN 5-6	5, 6	5, 6		5, 6	5, 6	3, 4, 5	M22×1,5, M24×1,5, M26×1,5
HN 7	7	7		7	7	6, 7	M28×1,5, M30×1,5, M32×1,5, M35×1,5
HN 8-9	8, 9	8, 9		8, 9	8, 9	8	M38×1,5, M40×1,5, M42×1,5
HN 10-11	10, 11	10, 11		10, 11	10, 11	9, 10	M45×1,5, M48×1,5, M50×1,5
HN 12-13	12, 13	12, 13		12, 13	12, 13	11, 12	M52×1,5, M55×1,5, M58×1,5, M60×1,5
HN 14	14		14	14	14		
HN 15	15		15	15	15	13, 14	M62×1,5, M65×1,5, M68×1,5, M70×1,5
HN 16	16		16	16	16	15	
HN 17	17		17	17	17	16	M72×1,5, M75×1,5,
HN 18-20	18, 19, 20		18, 19, 20	18, 19, 20	18, 19, 20	17, 18, 19	M80×2, M85×2, M90×2
HN 21-22	21, 22		21, 22		21, 22	20, 22	M95×2, M100×2

Technical data – HN series

Designation	Spanner design DIN 1810	Outer diameter lock nut	
	mm	mm	*in.*
HN 0		16–20	*0.6–0.8*
HN 1	Ø20–Ø22	20–22	*0.8–0.9*
HN 2-3	Ø25–Ø28	25–28	*1.0–1.1*
HN 4	Ø30–Ø32	30–32	*1.2–1.3*
HN 5-6		38–45	*1.5–1.8*
HN 7	Ø52–Ø55	52–55	*2.0–2.2*
HN 8-9		58–65	*2.3–2.6*
HN 10-11	Ø68–Ø75	68–75	*2.7–3.0*

Designation	Spanner design DIN 1810	Outer diameter lock nut	
	mm	mm	*in.*
HN 12-13	Ø80–Ø90	80–90	*3.1–3.5*
HN 14		92	*3.6*
HN 15	Ø95–Ø100	95–100	*3.7–3.9*
HN 16		105	*4.1*
HN 17	Ø110–Ø115	110–115	*4.3–4.5*
HN 18-20	Ø120–Ø130	120–130	*4.7–5.1*
HN 21-22	Ø135–Ø145	135–145	*5.3–5.7*



Four sizes for tightening or loosening up to 24 nut sizes

SKF Adjustable Hook Spanners HNA series

- One hook spanner covers several nut sizes, making it suitable for use with many applications
- Economic solution: 4 hook spanners cover a wide range of nut sizes
- Laser engraved designation, which represents the range of nut sizes covered by each spanner, allows easy selection of the correct spanner
- Versatile: suitable for a wide selection of lock nuts
- Minimises the risk of shaft and nut damage

Selection chart and technical data – HNA series

Designation	Outer diameter lock nut		Suitable for the following series of SKF lock nuts						
	mm	*in.*	KM	KML	N	AN	KMK	KMFE	KMT
HNA 1-4	20–35	*0.8–1.4*	1–4		2–4		0–4	4	0–2
HNA 5-8	35–60	*1.4–2.4*	5–8		5–8		5–8	5–8	3–7
HNA 9-13	60–90	*2.4–3.5*	9–13		9–13		9–13	9–13	8–12
HNA 14-24	90–150	*3.5–6.1*	14–24	24–26		14–24	14–20	14–24	13–24



Easy and quick bearing mounting and dismounting in SNL housings

SKF Hook Spanners HN ../SNL series

- Unique design allows the SKF HN ../SNL series to be used inside SKF SNL, FSNL, SNH and SE bearing housings
- Suitable for tightening and loosening a wide selection of lock nuts, facilitating their use in a wide range of housing and shaft applications
- The large contact area of the spanner around the nut provides excellent grip and force transmission
- Exact fit reduces the risk of shaft, nut and housing damage



Selection chart and technical data

Designation	Outer diameter lock nut		Suitable for SKF housings	Suitable for the following series of SKF lock nuts						
	mm	*in.*	SNL/FSNL/SNH /SE	KM	KML	N*	AN*	KMK*	KMFE	KMT*
HN 5/SNL	38	*1.50*	505, 506–605	5		5		5	5	5
HN 6/SNL	45	*1.77*	506–605, 507–606	6		6		6	6	6
HN 7/SNL	52	*2.05*	507–606, 508–607	7		7		7	7	7
HN 8/SNL	58	*2.28*	508–607, 510–608	8		8		8	8	8
HN 9/SNL	65	*2.56*	509, 511–609	9		9		9	9	9
HN 10/SNL	70	*2.76*	510–608, 512–610	10		10		10	10	10
HN 11/SNL	75	*2.95*	511–609, 513–611	11		11		11	11	11
HN 12/SNL	80	*3.15*	512–610, 515–612	12		12		12	12	12
HN 13/SNL	85	*3.35*	513–611, 516–613	13		13		13	13	13
HN 15/SNL	98	*3.86*	515–612, 518–615	15			15	15	15	15
HN 16/SNL	105	*4.13*	516–613, 519–616	16			16	16	16	16
HN 17/SNL	110	*4.33*	517, 520–617	17			17	17	17	17
HN 18/SNL	120	*4.72*	518–615	18			18	18	18	18
HN 19/SNL	125	*4.92*	519–616, 522–619	19			19	19	19	19
HN 20/SNL	130	*5.12*	520–617, 524–620	20		22	20,21	20	20	20
HN 22/SNL	145	*5.71*	522–619	22	24	24	22		22	22
HN 24/SNL	155	*6.10*	524–620	24	26	26	24		24	24
HN 26/SNL	165	*6.50*	526	26	28	28	26		26	26
HN 28/SNL	180	*7.09*	528	28	30	30				
HN 30/SNL	195	*7.68*	530	30	32	34	30			32
HN 32/SNL	210	*8.27*	532	32		36				

* Not recommended for use in combination with SNL/SNH housing



Easy mounting and dismounting without nut damage

SKF Axial Lock Nut Sockets TMFS series

- Requires less space around the bearing arrangement than hook spanners
- Inch connections for power tools or torque wrenches
- SKF TMFS fits nuts of series KM, KMK (metric) and KMF
- Special versions are available on request



Selection chart and technical data

Designation	Suitable for nuts of series			Dimensions						Connection
	KM, KMK	KMFE	DIN 1804 (M)	Outer diameter lock nut		Outer diameter socket		Effective height		
				mm	*in.*	mm	*in.*	mm	*in.*	*in.*
TMFS 0	0			18	*0.7*	22,0	*0.9*	45	*1.8*	3/8
TMFS 1	1			22	*0.9*	28,0	*1.1*	45	*1.8*	3/8
TMFS 2	2		M10×1	25	*1.0*	33,0	*1.3*	61	*2.4*	1/2
TMFS 3	3		M12×1,5	28	*1.1*	36,0	*1.4*	61	*2.4*	1/2
TMFS 4	4	4	M16×1,5	32	*1.3*	38,0	*1.5*	58	*2.3*	1/2
TMFS 5	5	5		38	*1.5*	46,0	*1.8*	58	*2.3*	1/2
TMFS 6	6	6	M26×1,5	45	*1.8*	53,0	*2.1*	58	*2.3*	1/2
TMFS 7	7	7	M32×1,5	52	*2.0*	60,0	*2.4*	58	*2.3*	1/2
TMFS 8	8	8	M38×1,5	58	*2.3*	68,0	*2.7*	58	*2.3*	1/2
TMFS 9	9	9		65	*2.6*	73,5	*2.9*	63	*2.5*	3/4
TMFS 10	10	10		70	*2.8*	78,5	*3.1*	63	*2.5*	3/4
TMFS 11	11	11	M48×1,5, M50×1,5	75	*3.0*	83,5	*3.3*	63	*2.5*	3/4
TMFS 12	12	12	M52×1,5, M55×1,5	80	*3.1*	88,5	*3.5*	63	*2.5*	3/4
TMFS 13	13	13		85	*3.3*	94,0	*3.7*	63	*2.5*	3/4
TMFS 14	14	14		92	*3.6*	103,0	*4.1*	80	*3.2*	*1*
TMFS 15	15	15		98	*3.9*	109,0	*4.3*	80	*3.2*	*1*
TMFS 16	16	16		105	*4.1*	116,0	*4.6*	80	*3.2*	*1*
TMFS 17	17	17	M72×1,5, M75×1,5	110	*4.3*	121,0	*4.8*	80	*3.2*	*1*
TMFS 18	18	18		120	*4.7*	131,0	*5.2*	80	*3.2*	*1*
TMFS 19	19	19	M85×2	125	*4.9*	137,0	*5.5*	80	*3.2*	*1*
TMFS 20	20	20	M90×2	130	*5.1*	143,0	*5.7*	80	*3.2*	*1*



High impact forces without nut damage

SKF Impact Spanners TMFN series

- Helps avoid shaft and nut damage
- Safe and user friendly
- Impact applied effectively to the nut
- Suitable for a wide selection of lock nuts
- Special wide impact face
- To be used in combination with a hammer

Selection chart

Designation	Suitable for adapter sleeves		Suitable for nuts of series						
	H 23, H 31, H 32	H 30, H 39	KM	KML	HM T	HM	KMFE	KMT	DIN 1804 (M)
TMFN 23-30	24–30	26–32	23–30	26–32	–	–	23–28 26L–28L	24–30	M105×2, M105×2, M110×2, M115×2, M120×2, M125×2, M130×3, M140×3, M150×3, M160×3
TMFN 30-40	30–40	34–40	32–38	34–40	–	–	30–40	32–40	M170x3, M180x3, M190x3, M200x3
TMFN 40-52	40–48	44–52	40	–	42T–50T	3044–3052	–	40, 44, 48	–
TMFN 52-64	52–64	56–68	–	–	52T–56T	3056–3068	–	–	–
TMFN 64-80	64–80	68–88	–	–	–	3168–3088	–	–	–
TMFN 80-500	80–500	88–530	–	–	–	3184–30/500	–	–	–
TMFN 500-600	500–600	530–630	–	–	–	31/500–30/630	–	–	–
TMFN 600-750	600–750	670–800	–	–	–	31/600–31/800	–	–	–

Technical data

Designation	Lock nut outer diameter	
	mm	*in.*
TMFN 23-30	150–220	*5.9–8.7*
TMFN 30-40	195–270	*7.7–10.6*
TMFN 40-52	250–320	*9.8–12.6*
TMFN 52-64	330–400	*12.6–15.7*
TMFN 64-80	420–520	*15.7–20.5*
TMFN 80-500	540–620	*21.3–24.8*
TMFN 500-600	630–730	*24.8–29.5*
TMFN 600-750	750–950	*29.5–37.4*

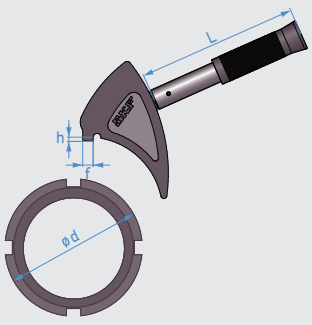

Design of TMFN 23-30 and TMFN 30-40

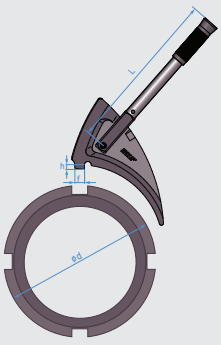

Design of other sizes TMFN impact spanners



For achieving the correct radial clearance

SKF Bearing Lock Nut Spanner TMHN 7 series

The SKF TMHN 7 set of lock nut spanners is especially designed for mounting self-aligning ball bearings as well as small spherical roller and CARB toroidal roller bearings on tapered seatings. Using the SKF TMHN 7, minimises the risk of over-tightening of the lock nut, which can remove the bearing's radial clearance resulting in bearing damage.

- 7 different-sized spanners to fit nut sizes 5 to 11
- Each spanner is equipped with a protractor and is clearly marked with the correct tightening angle for mounting SKF Self aligning ball bearings
- 4 grip points on each spanner provide a better and safer grip on the nut
- Reduced risk of damaging bearing by over-tightening
- Suitable for use with lock nuts of the KM series either on shaft or in SNL housings

TMHN 7 is suitable for use with:

Bearing designation
1205 EK–1211 EK
1306 EK–1311 EK
2205 EK–2211 EK
2306 K
2307 EK–2309 EK
2310 K–2311 K

Technical data

Designation	TMHN 7
Dimensions of case (w × d × h)	340 × 250 × 80 mm *(13.4 × 9.8 × 3.1 in.)*
Weight	2,2 kg *(4.7 lb)*

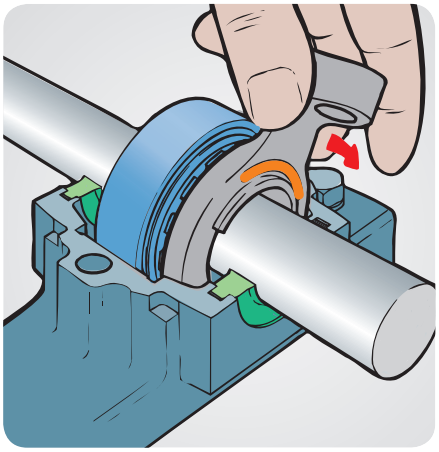

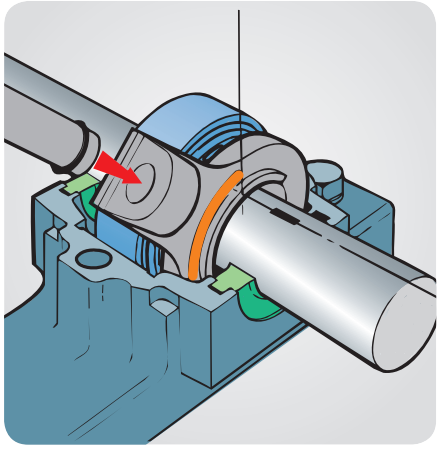

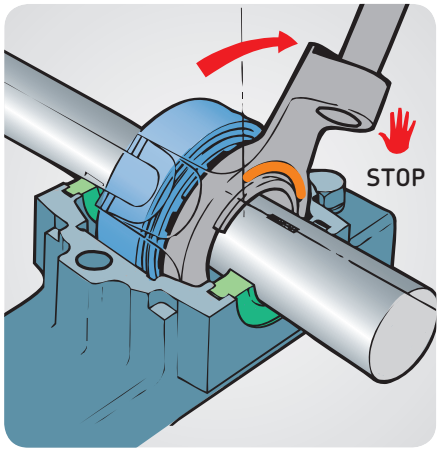

® SKF is a registered trademark of the SKF Group.

© SKF Group 2014
The contents of this publication are the copyright of the publisher and may not be reproduced (even extracts) unless prior written permission is granted. Every care has been taken to ensure the accuracy of the information contained in this publication but no liability can be accepted for any loss or damage whether direct, indirect or consequential arising out of the use of the information contained herein.

PUB MP/P8 13074 EN · November 2014

