THE INFORMATION CONTAINED IN THIS DRAWING IS THE SOLE PROPERTY OF L-COM, INC. ANY REPRODUCTION IN PART OR WHOLE WITHOUT THE WRITTEN PERMISSION OF L-COM, INC. IS PROHIBITED.

REVISIONS

REV	DESCRIPTION	DATE	CHANGED BY
A	INITIAL RELEASE	2/4/08	D.FRISIELLO

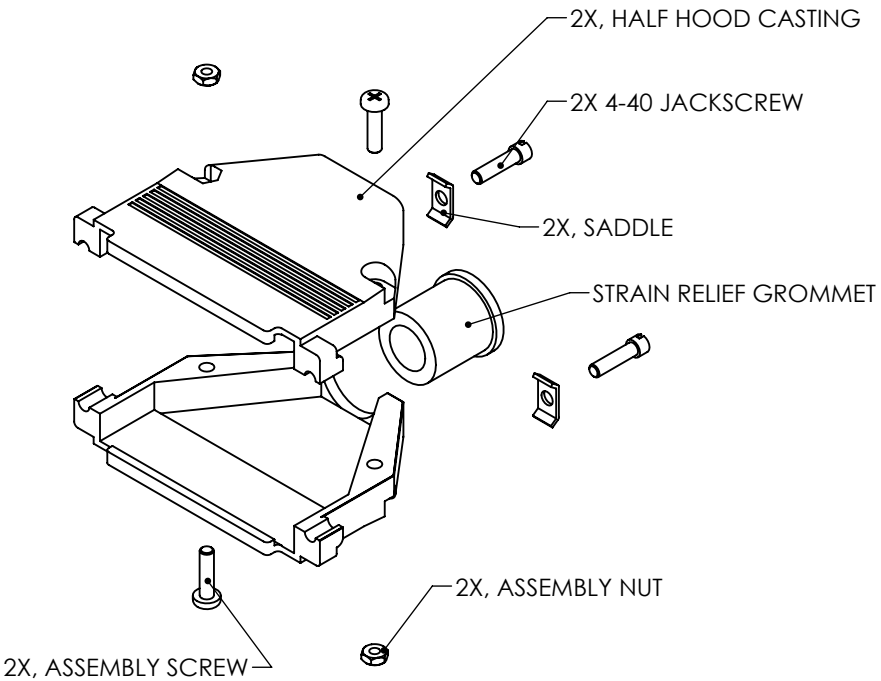

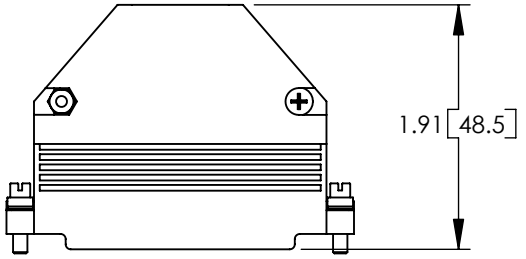

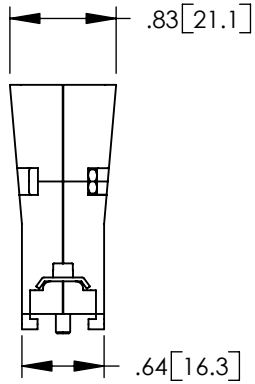

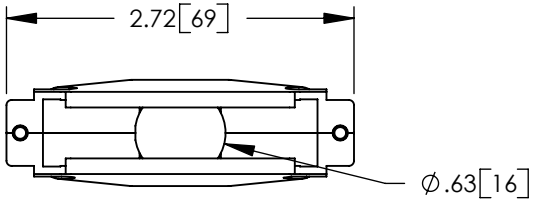

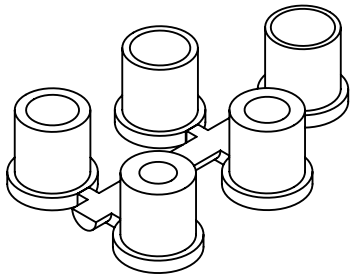

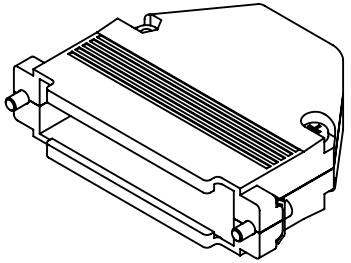

NOTES:

MATERIAL:
HOOD: DIE-CAST ZINC ALLOY
JACKSCREW: STEEL
ASSEMBLY HARDWARE: STEEL
STRAIN RELIEF GROMMETS: PVC, BLACK

FINISH:
HOOD: NICKEL PLATED, MATTE FINISH ON MAJOR SURFACES
JACKSCREWS: NICKEL PLATED
ASSEMBLY HARDWARE: NICKEL PLATED

MISCELLANEOUS:
INTENDED FOR USE WITH 37 PIN STANDARD AND 62 PIN HIGH DENSITY D-SUBMINIATURE CONNECTORS.
SUPPLIED WITH 5 STRAIN RELIEF GROMMETS FOR CABLES HAVING DIAMETERS RANGING FROM .310 TO .530 INCH.

UNLESS OTHERWISE SPECIFIED, DIMENSIONS ARE IN INCHES [mm]
TOLERANCES TO BE:
.X ±.1 [2.5] ANGLES ±2°
.XX ±.01 [.25]
.XXX ±.005 [.13]
OVERALL CABLE LENGTH TOL:
≤ 60 [1524] +3 [76.2] / - 0
> 60 [1524] +5% / -0%
PROJ

APPROVALS	DATE
DRAWN BY D.FRISIELLO	2/4/08
CHECKED BY D.FORTIN	2/4/08
APPROVED BY S.SMITH	2/4/08

CONFIGURATION DETAILS OF UNDIMENSIONED FEATURES MAY VARY

L-com CONNECTIVITY PRODUCTS
45 BEECHWOOD DRIVE
NORTH ANDOVER, MA
01845

CATEGORY
DATA CABLING

PRODUCT DESCRIPTION
DB37 & HD62 HOOD KIT

SIZE	FSCM NO.	DWG. NO.	REV.
A	43321	SDC37AG	A

SCALE: NONE | CAD FILE: SDC37AG.SLDDRW | SHEET 1 OF 1