# IN0109

## Inductive dual sensor for valve actuators

IND2004DABOA/RTF

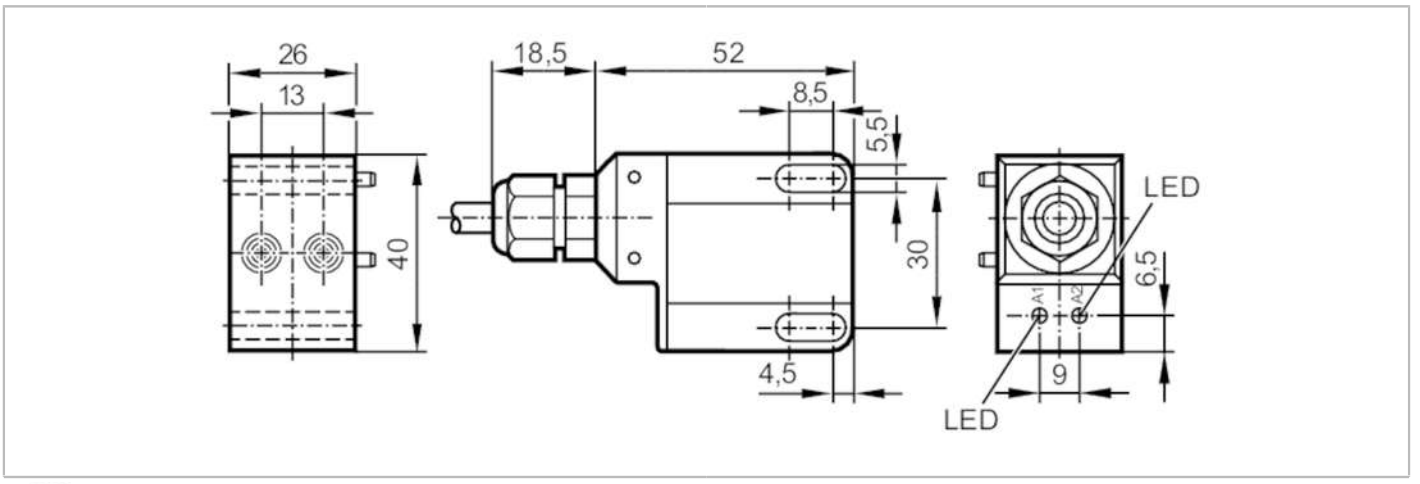


| | | |
|---|---|---|
| **Product characteristics** | | |
| Output function | | 2 x normally open |
| Sensing range | [mm] | 4 |
| Housing | | rectangular |
| Dimensions | [mm] | 70.5 x 26 x 40 |
| **Electrical data** | | |
| Frequency AC | [Hz] | 47...63 |
| Operating voltage | [V] | 20...250 AC/DC |
| Protection class | | II |
| Reverse polarity protection | | no |
| **Outputs** | | |
| Output function | | 2 x normally open |
| Max. voltage drop switching output DC | [V] | 6.5 |
| Max. voltage drop switching output AC | [V] | 6.5 |
| Minimum load current | [mA] | 5 |
| Max. leakage current | [mA] | 2.5 (250 V AC) / 1.3 (110 V AC) / 0.8 (24 V DC) |
| Permanent current rating of switching output AC | [mA] | 250;  (350 (...50 °C)) |
| Permanent current rating of switching output DC | [mA] | 100 |
| Short-time current rating of switching output | [mA] | 2200;  (20 ms / 0,5 Hz) |
| Switching frequency AC | [Hz] | 25 |
| Switching frequency DC | [Hz] | 50 |
| Short-circuit proof | | no |
| Overload protection | | no |
| **Detection zone** | | |
| Sensing range | [mm] | 4 |
| Real sensing range Sr | [mm] | 4 ± 10 % |

# IN0109

## Inductive dual sensor for valve actuators

IND2004DABOA/RTF

| | | | |
|---|---|---|---|
| Operating distance | [mm] | 0...3.25 | |
| **Accuracy / deviations** | | | |
| Correction factor | | steel: 1 / stainless steel: 0.7 / brass: 0.5 / aluminium: 0.4 / copper: 0.3 | |
| Hysteresis | [% of Sr] | 3...15 | |
| Switch point drift | [% of Sr] | -10...10 | |
| **Operating conditions** | | | |
| Ambient temperature | [°C] | -25...80 | |
| Protection | | IP 67 | |
| **Tests / approvals** | | | |
| EMC | | EN 60947-5-2 | |
| | | EN 55011 | class B |
| **Mechanical data** | | | |
| Weight | [g] | 221 | |
| Housing | | rectangular | |
| Mounting | | non-flush mountable | |
| Dimensions | [mm] | 70.5 x 26 x 40 | |
| Materials | | PC | |
| **Displays / operating elements** | | | |
| Display | | switching status | 2 x LED, yellow |
| **Electrical connection** | | | |
| Required protection | | miniature fuse to IEC60127-2 sheet 1; ≤ 2 A; fast acting | |
| **Remarks** | | | |
| Remarks | | Recommendation: Check the safe functioning of the unit after a short circuit. | |
| Pack quantity | | 1 pcs. | |

## Electrical connection

Cable: 2 m; 4 x 0.5 mm²

### Connection

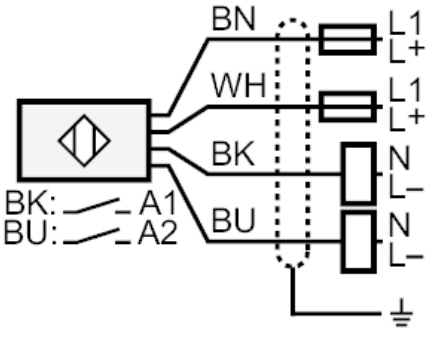


Note miniature fuse to IEC60127-2 sheet 1 ≤ 2 A fast acting