M12 male 0° / RJ45 male 0° shielded Ethernet

PUR 2x2xAWG22 shielded gn UL,CSA+dragch. 5m

Male straight – male straight
M12 – RJ45, 4-pole
D-coded
shielded
Ethernet CAT5

Further cable lengths on request. Plastic housings with good resistance against chemicals and oils. The resistance to aggressive media should be individually tested for your application. Further details on request.

Link to Product

Illustration

The information in this brochure has been compiled with the utmost care.
Liability for the correctness completeness and topicality of the information is restricted to gross negligence. Version: 01/20

MURR ELEKTRONIK
stay connected

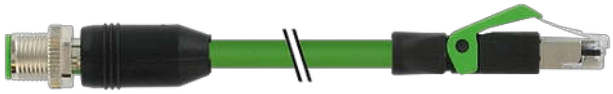

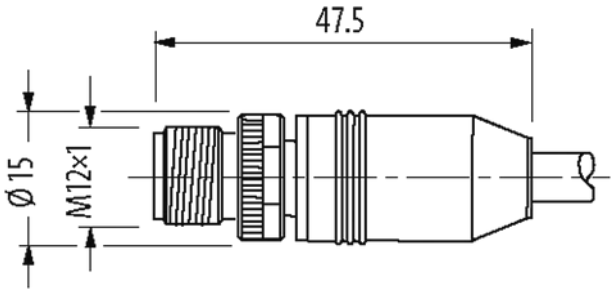

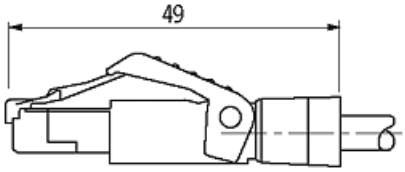

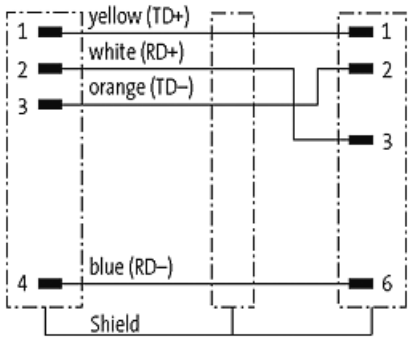

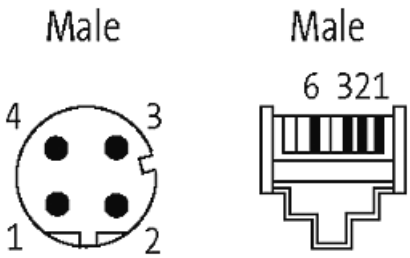

Product may differ from Image

Approvals

c UL us Listed *

* only for products with UL/CSA approved cable

More Info

EtherNet/IP

EtherCAT.

PROFINET

Form

The information in this brochure has been compiled with the utmost care.
Liability for the correctness completeness and topicality of the information is restricted to gross negligence. Version: 01/20

Form	44711
Cables	
No./diameter of wires	2× 2× 0.34 mm²
Wire isolation	PE (wh, ye, bl, or)
C-track properties	3 Mio.
Jacket Color	green
Material (jacket)	PUR (UL/CSA)
Outer Ø	6.7 mm ±5%
Bend radius (moving)	12× outer Ø
Temperature range (fixed)	-40...+80 °C
Temperature range (mobile)	-30...+70 °C
Cable identification	796
Approval (cable)	UL (AWM-Style 20233/11602), CSA; CE
Cable weight [g/m]	71
Material (wire)	Cu wire, bare
Resistor (core)	max. 55 Ω/km (20 °C)
Diameter (core)	2× 2× AWG22
Material (wire isolation)	PE
Wire-Ø incl. isolation	1.4 mm ±5%
Color/numbering of wires	wh, ye, bl, or
Shield	yes
	min. 85%
Material (jacket)	PUR
Outer-Ø (jacket)	6.7 mm ±5%
Color (jacket)	green
thermal resistance	flame retardant
Nominal voltage	300 V
Temperature range (fixed)	-40...+80 °C
Temperature range (mobile)	-30...+70 °C
Bend radius (fixed)	5× outer Ø
Bend radius (moving)	12× outer Ø
No. of bending cycles (C-track)	max. 3 Mio. (25 °C)
Traversing distance (C-track)	max. 5 m (horizontal)
Travel speed (C-track)	max. 3.3 m/s
Acceleration (C-track)	max. 2 m/s²
Technical Data	
Operating voltage	max. 60 V DC
Operating voltage (only UL listed)	max. 30 V DC
Rated surge voltage	1.0 kV
Operating current per contact	max. 1.5 A (20 °C)
Material group	IEC 60664-1, category I
Transfer parameters	CAT5, Class D (ISO/IEC 11801:2002), (EN 50173-1)
Transfer rate	up to 100 Mbit/s full duplex
Coding	M12, D-coded
Locking of ports	Screw thread (M12×1 mm) recommended torque 0.6 Nm, self-securing
Compression gland	M12 (SW13)
Protection	IP67 (M12) - IP20 (RJ45)
Locking material	Zinc die casting, matte nickel plated
Material	PUR
suitable for corrugated tube (internal Ø)	without

The information in this brochure has been compiled with the utmost care.
Liability for the correctness completeness and topicality of the information is restricted to gross negligence. Version: 01/20

stay connected

General data	
Standards	DIN EN 61076-2-101 (M12)
Pollution Degree	3
Temperature range	-25...+85 °C, depending on cable quality

Commercial data	
country of origin	DE
customs tariff number	85444290
EAN	4048879140898
eClass	27061801
Packaging unit	1

The information in this brochure has been compiled with the utmost care.
Liability for the correctness completeness and topicality of the information is restricted to gross negligence. Version: 01/20