The light intensity sensor / twilight sensor **PHOT**ASGARD® **AHKF** with six switchable measuring ranges (six devices in one) measures the luminous intensity and is used to control luminaries, lighting systems, Venetian blinds and canvas blinds, etc., to monitor lighting conditions at work-places, in greenhouses, storage halls, workshops, corridors, in outdoor areas, in industrial halls, in offices as well as in residential and business facilities, for daylight-dependant constant light control, as light intensity or twilight sensor and as sun protection control to avoid unnecessary room heating. Therefore it minimizes your variety of types and stock keeping while covering a greater range of universal applications. The sensor used was specifically adapted to the sensitivity of the human eye. Its greatest sensitivity is in the range of 400 nm to 700 nm. With its special filter, the sensor is therefore ideally suited for measuring exposure to daylight and / or for measuring artificial light of high colour temperature (similar to sunlight).

AHKF



TECHNICAL DATA

Power supply:	24 V AC (± 20 %); 15...36 V DC for U variant 15...36 V DC for I variant, depending on working resistance, residual ripple stabilised ± 0.3 V
Working resistance:	R_a (ohm) = (U_b -14 V) / 0.02 A for I variant
Load resistance:	R_L > 5 kOhm for U variant
Power consumption:	< 1 W at 24 V DC; < 2 VA at 24 V AC
Sensor:	light sensor (see beginning of this chapter)
Measuring ranges:	**multi-range switching** (via DIP switches) **0...500 Lux / 1 kLux / 2 kLux / 5 kLux / 20 kLux / 60 kLux** (other individual ranges optional, e. g. 100 kLux)
Output:	4...20 mA or 0-10 V (2- or 3-wire connection)
Deviation:	typically < 5 % of final value
Ambient temperature:	–30...+70 °C
Electrical connection:	0.14 - 1.5 mm², via terminal screws
Housing:	plastic, UV-resistant, material polyamide, 30 % glass-globe reinforced, with quick-locking screws (slotted / Phillips head combination), colour traffic white (similar to RAL 9016), Housing cover is transparent!
Housing dimensions:	72 x 64 x 43.3 mm (Tyr 1)
Cable connection:	**cable gland**, plastic (M 16 x 1.5; with strain relief, exchangeable, nner diameter 10.4 mm) **or** **M12 connector** (optional on request)
Installation:	on-wall
Protection class:	III (according to EN 60 730)
Protection type:	**IP 67** (according to EN 60 529) housing tested, TÜV SÜD, report no. 713139052 (Tyr 1)
Standards:	CE conformity, electromagnetic compatibility according to EN 61 326, EMC directive 2014 / 30 / EU

Measuring ranges (selectable)	DIP 1	DIP 2	DIP 3	DIP 4
0...500 Lux	OFF	OFF	OFF	–
0... 1 kLux	**ON**	OFF	OFF	–
0... 2 kLux	OFF	**ON**	OFF	–
0... 5 kLux	**ON**	**ON**	OFF	–
0... **20 kLux** (default)	OFF	OFF	**ON**	–
0... 60 kLux	**ON**	OFF	**ON**	–

Connecting diagram **AHKF-U**



UB+ supply voltage 24V AC/DC
Output light intensity 0-10V
UB– GND

Connecting diagram **AHKF-I**



UB+ supply voltage 24V DC
Output light intensity 4...20mA

Dimensional drawing **AHKF**

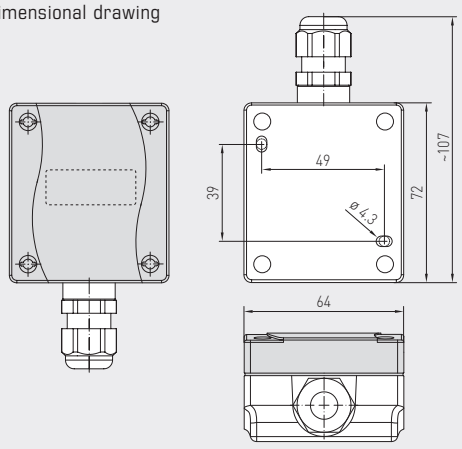



M12 connector
(optional on request)

Schematic diagram **AHKF**

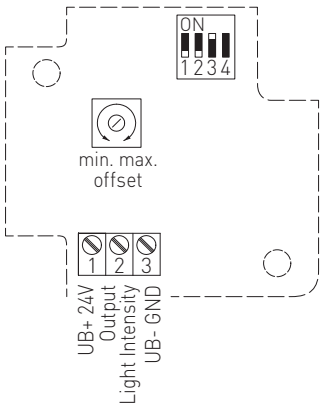

PHOTASGARD® AHKF Outdoor light intensity sensors / twilight sensors

Type / WG01	Measuring Range Light Intensity (adjustable)	Output Light Intensity	Item No.	Price
AHKF				
AHKF-I	0...500 Lux / 1 / 2 / 5 / 20 / 60 kLux	4 ... 20 mA	1601-1112-1000-000	**103,80 €**
AHKF-U	0...500 Lux / 1 / 2 / 5 / 20 / 60 kLux	0-10 V	1601-1111-1000-000	**103,80 €**
Extra charge:	Other individual measuring ranges optional, e. g. 100 kLux		on request	