

Image may differ from product. See technical specification for details.

29428 E

Spherical roller thrust bearing with stamped steel cage

Spherical roller thrust bearings accommodate very heavy axial and considerable radial loads. They have the highest load rating of all thrust bearings, enabling compact, high power density bearing arrangements. By combining two or more spherical roller thrust

bearings, it is possible to create a bearing arrangement that is either self-aligning, allowing misalignment of the shaft, or very stiff.

- High load carrying capacity
- Can accommodate combined loads
- Allow misalignment or create very stiff bearing arrangements
- Long service life and low friction
- Separable design

Overview

Dimensions

Bore diameter	140 mm
Outside diameter	280 mm
Height	85 mm

Performance

Basic dynamic load rating	1 630 kN
Basic static load rating	4 300 kN
Reference speed	1 300 r/min
Limiting speed	2 400 r/min
SKF performance class	SKF Explorer

Properties

Locating feature, housing washer	None
Bore type	Cylindrical
Cage	Sheet metal
Tolerance class	Normal

Logistics

Product net weight	22.5 kg
eClass code	23-05-11-03
UNSPSC code	31171507

Technical specification

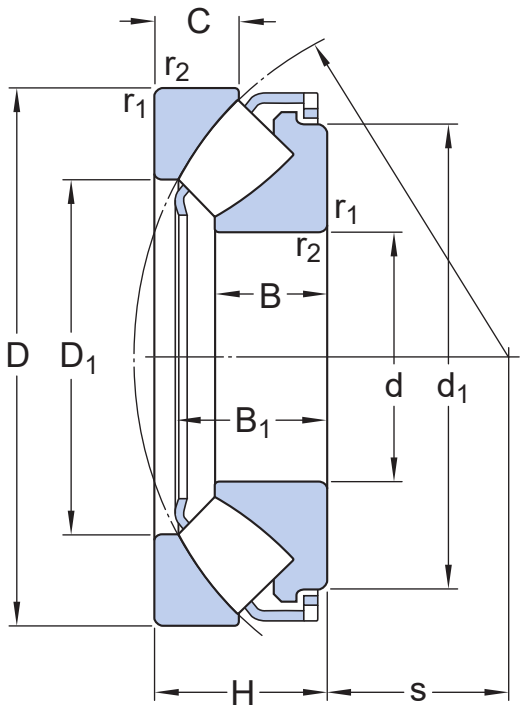

Dimensions

d	140 mm	Bore diameter
D	280 mm	Outside diameter
H	85 mm	Height
d_1	≈ 245 mm	Outside diameter of shaft washer end side face
D_1	≈ 195 mm	Shoulder diameter outer ring
B	54 mm	Width shaft washer or length of shaft washer bore diameter that fits on shaft (bearings with a stamped steel cage)
B_1	75.6 mm	Height shaft washer + cage
C	41 mm	Height housing washer
s	86 mm	Distance from shaft washer end side face to pressure point
$r_{1,2}$	min. 4 mm	Chamfer dimension shaft washer

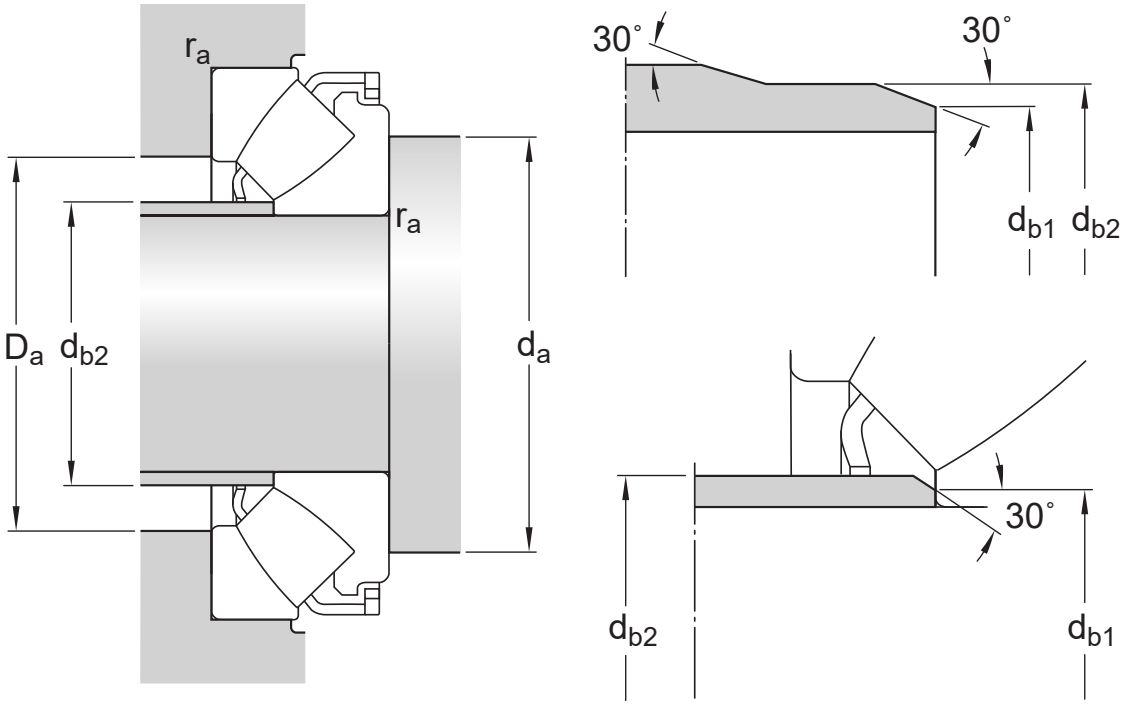

Abutment dimensions

d_a	min. 205 mm	Diameter of shaft abutment
d_{b1}	max. 153 mm	Abutment diameter of spacer ring
d_{b2}	max. 162 mm	Outside diameter of spacer ring
D_a	max. 236 mm	Diameter of housing abutment
r_a	max. 3 mm	Fillet radius

Calculation data

Basic dynamic load rating	C	1 630 kN
Basic static load rating	C_0	4 300 kN
Fatigue load limit	P_u	455 kN
Reference speed		1 300 r/min
Limiting speed		2 400 r/min
Minimum axial load factor	A	1.8

Tolerances and clearances

GENERAL BEARING SPECIFICATIONS

- Tolerances: table

BEARING INTERFACES

- Seat tolerances for standard conditions
- Tolerances and resultant fit

More Information

Product details

- Designs and variants
- General bearing specifications
- Loads
- Temperature limits
- Permissible speed
- Design considerations
- Lubrication
- Mounting
- Designation system

Engineering information

- Principles of rolling bearing selection
- General bearing knowledge
- Bearing selection process
- Bearing failure and how to prevent it

Tools

- SimPro Quick
- SKF Product select
- Bearing Frequency Calculator
- LubeSelect for SKF greases
- Heater selection tool

Terms of use

By accessing and using this website / app owned and published by AB SKF (publ.) (556007-3495 · Gothenburg) (“SKF”), you agree to the following terms and conditions:

Warranty Disclaimer and Limitation of Liability

Although every care has been taken to assure the accuracy of the information on this website / app, SKF provides this information "AS IS" and DISCLAIMS ALL WARRANTIES, EXPRESS OR IMPLIED, INCLUDING, BUT NOT LIMITED TO, IMPLIED WARRANTIES OF MERCHANTABILITY AND FITNESS FOR A PARTICULAR PURPOSE. You acknowledge that your use of this website / app is at your sole risk, that you assume full responsibility for all costs associated with use of this website / app, and that SKF shall not be liable for any direct, incidental, consequential, or indirect damages of any kind arising out of your access to, or use of the information or software made available on this website / app.

Any warranties and representations in this website / app for SKF products or services that you purchase or use will be subject to the agreed upon terms and conditions in the contract for such product or service.

Further, for non-SKF websites / apps that are referenced in our website / app or where a hyperlink appears, SKF makes no warranties concerning the accuracy or reliability of the information in these websites / apps and assumes no responsibility for material created or published by third parties contained therein. In addition, SKF does not warrant that this website / app or these other linked websites / apps are free from viruses or other harmful elements.

Third Party Services

When viewing YouTube content via the SKF website(s) (i.e. using YouTube API Services), you agree to be bound by the YouTube Terms of Service.

Copyright

Copyright in this website / app copyright of the information and software made available on this website / app rest with SKF or its licensors. All rights are reserved. All licensed material will reference the licensor that has granted SKF the right to use the material. The information and software made available on this website / app may not be reproduced, duplicated, copied, transferred, distributed, stored, modified, downloaded or otherwise exploited for any commercial use without the prior written approval of SKF. However, it may be reproduced, stored and downloaded for use by individuals without prior written approval of SKF. Under no circumstances may this information or software be supplied to third parties.

This website /app includes certain images used under license from Shutterstock, Inc.

Trademarks and Patents

All trademarks, brand names, and corporate logos displayed on the website / app are the property of SKF or its licensors, and may not be used in any way without prior written approval by SKF. All licensed trademarks published on this website / app reference the licensor that has granted SKF the right to use the trademark. Access to this website / app does not grant to the user any license under any patents owned by or licensed to SKF.

Changes

SKF reserves the right to make changes or additions to this website / app at any time.