87045 LIMOGES Cedex
Telephone : + 33 0 5 55 06 87 87 - Fax : + 33 0 5 55 06 88 88

IP44 and 66/67 P17 plugs, mobile sockets, socket outlets and applicance inlets

Cat. No.(s) : 521 00/01/02/03/05 - 539 49 - 552 XX - 553 XX 559 XX - 562 XX - 563 XX - 564 XX - 565 XX - 568 XX 573 XX - 574 XX - 575 XX - 576 XX - 577 21/22 580 XX - 581 XX 582 XX - 587 XX - 591 XX

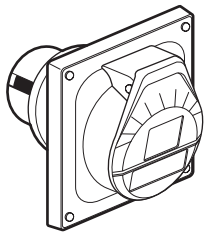

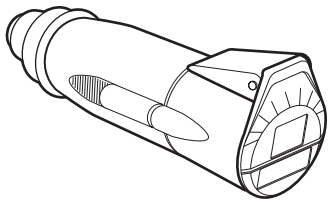

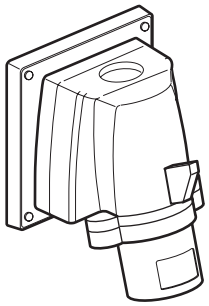

CONTENT Page

1. General characteristics 1
2. Range . . . . . .1 to 5
3. Dimensions . . . . . .5 to 10
4. Technical characteristics . . . . .10 to 11
5. Connection 11
6. Wiring diagram 12
7. Standards, decree, agrements 12
8. Accessories 12

1. TECHNICAL CHARACTERISTICS

- IP44 : 16 to 32A
- IP66/67 : 16 to 125A
- Material : plastic
- IK 09

A. Socket outlets and appliance inlets
- Connection via captive screws (16 and 32 A)
- Philips screws (flat or Philips screwdriver)
- Angle :
  - 10° panel mounting sockets with single fixing centers (70 x 70)
  - 20° inclined panel mounting sockets
  - 75° surface mounting sockets
  - 80° appliance inlets
- Removable support of active parts (surface mounting sockets)

B. Plugs and mobile sockets
- Connection via captive screws (16 and 32 A)
- Flexible nozzle on all the IP44 range
- Captive internal cable clamp for the IP44 range and cable gland with clamping claw for the IP66/67 range and IP44 angled plugs, clamping accessible from outside, enabling quick checking that clamping is correct.
- Fast captive zinc plated steel screws to close the product.

Quick installation

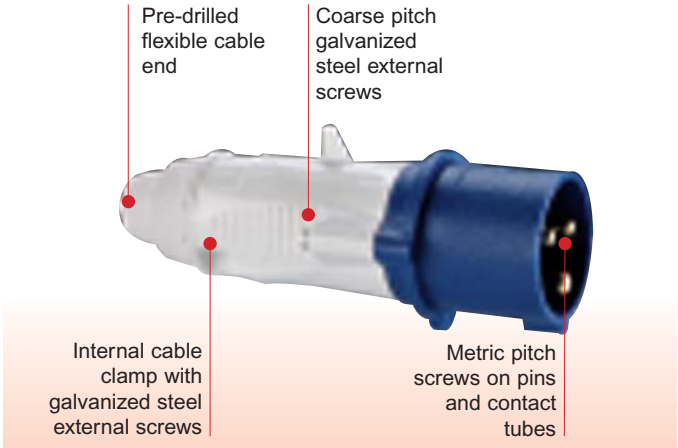

2. RANGE

Surface mounting socket 16/32/63/125A IP44 and IP66/67

				IP44	IP 66/67
ELV	20 to 25V⎓	16A	2P	55206	
			3P	55207	
		32A	2P	55256	
			3P	55257	
	40 to 50V⎓	16A	2P	55208	
			3P	55209	
		32A	2P	55258	
			3P	55259	
	20 to 50V≂	16A	2P	55210	
		32A	2P	55260	
LV	100 to 130V⎓	16A	2P+E	55350	55300
			3P+E	55351	55301
			3P+N+E	55352	55302
		32A	2P+E	55370	55320
			3P+E	55371	55321
			3P+N+E	55372	55322
		63A	2P+E		55340
			3P+E		55341
			3P+N+E		55342
	200 to 250V⎓	16A	2P+E	55353	55303
			3P+E	55354	55304
			3P+N+E	55355	55305
		32A	2P+E	55373	55323
			3P+E	55374	55324
			3P+N+E	55375	55325
		63A	2P+E		58740
			3P+E		58741
			3P+N+E		58742
		125A	3P+E		59100
			3P+N+E		59101
	380 to 415V⎓	16A	2P+E	55356	55306
			3P+E	55357	55307
			3P+N+E	55358	55308
		32A	2P+E	55376	55326
			3P+E	55377	55327
			3P+N+E	55378	55328
		63A	2P+E		55346
			3P+E		58744
			3P+N+E		58745
		125A	3P+E		59106
			3P+N+E		59107
	480 to 500V⎓	16A	3P+E	55359	55309
			3P+N+E	55360	55310
		32A	3P+E	55379	55329
			3P+N+E	55380	55330
		63A	3P+E		55348
			3P+N+E		55349

IP44 and 66/67 P17 plugs, mobile sockets, socket outlets and applicance inlets

Cat. No.(s) : 521 00/01/02/03/05 - 539 49 - 552 XX - 553 XX
559 XX - 562 XX - 563 XX - 564 XX - 565 XX - 568 XX
573 XX - 574 XX - 575 XX - 576 XX - 577 21/22
580 XX - 581 XX 582 XX - 587 XX - 591 XX

2. RANGE *(continued)*

Panel mounting sockets 16/32A IP44

				Single fixing center 70 x 70	Inclined outlet	Straight outlet
ELV	20 to 25V~	16A	2P	55245		55211
			3P	55246		55212
		32A	2P	55295		55261
			3P	55296		55262
	40 to 50V~	16A	2P	55247		55213
			3P	55248		55214
		32A	2P	55297		55263
			3P	55298		55264
	20 to 50V=	16A	2P	57350		55215
		32A	2P	58050		55265
LV	100 to 130V	16A	2P+E	57610	57361	57351
			3P+E		57362	
			3P+N+E		57363	
		32A	2P+E	57608		58051
			3P+E	57609		
			3P+N+E			
	200 to 250V	16A	2P+E	57611	57364	57354
			3P+E	57615	57365	
			3P+N+E	57621	57366	
		32A	2P+E	57612		58054
			3P+E	57616		
			3P+N+E	57622		
	380 to 415V	16A	2P+E		57367	
			3P+E	57617	57368	57358
			3P+N+E	57623	57369	57359
		32A	2P+E	57614		
			3P+E	57618		58058
			3P+N+E	57624		58059
	480 to 500V	16A	3P+E	57619	55959	
			3P+N+E	57625	55960	
		32A	3P+E	57620		
			3P+N+E	57626		

Note : Only the panel mounting sockets (70 x 70) can be fixed on the pre-drilled face plates of the P17 combined units.

Reminder about the installation of the IEC sockets on the face-plate 577 14.

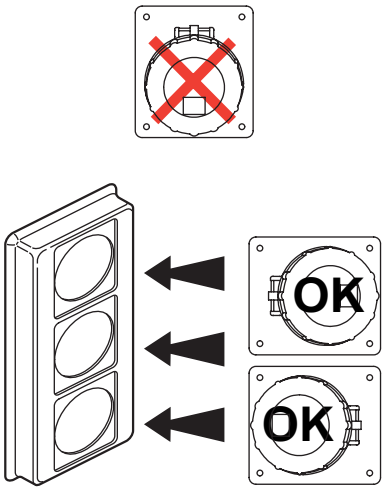

IP44 and 66/67 P17 plugs, mobile sockets, socket outlets and applicance inlets

Cat. No.(s) : 521 00/01/02/03/05 - 539 49 - 552 XX - 553 XX
559 XX - 562 XX - 563 XX - 564 XX - 565 XX - 568 XX
573 XX - 574 XX - 575 XX - 576 XX - 577 21/22
580 XX - 581 XX 582 XX - 587 XX - 591 XX

2. RANGE *(continued)*

Panel mounting sockets 16/32/63/125A IP66/67

				Single fixing centres 70 x 70	Inclined outlet
LV	100 to 130V~	16A	2P+E	57650	55900
			3P+E		55901
			3P+N+E		55902
		32A	2P+E	57648	
			3P+E	57649	
			3P+N+E		
		63A	2P+E		55940
			3P+E		55941
			3P+N+E		55942
	200 to 250V~	16A	2P+E	57651	55903
			3P+E	57655	55904
			3P+N+E	57661	55905
		32A	2P+E	57652	
			3P+E	57656	
			3P+N+E	57662	
		63A	2P+E		58720
			3P+E		58721
			3P+N+E		58722
		125A	3P+E		59110
			3P+N+E		59111
	380 to 415V~	16A	2P+E	57653	55906
			3P+E	57657	55907
			2P+N+E	57663	55908
		32A	2P+E	57654	
			3P+E	57658	
			3P+N+E	57664	
		63A	2P+E		55946
			3P+E		58724
			3P+N+E		58725
		125A	3P+E		59116
			3P+N+E		59117
	480 to 500V~	16A	3P+E	57659	55909
			3P+N+E	57665	55910
		32A	3P+E	57660	
			3P+N+E	57666	
		63A	3P+E		58727
			3P+N+E		55950

Note : Only the panel mounting sockets (70 x 70) can be fixed on the faceplates of the P17 combined units.

See the installation on the faceplate 577 14 (page 2/12).

2. RANGE *(continued)*

Mobile sockets 16/32/63/125A IP44 and IP66/67

				IP44	IP 66/67
ELV	20 to 25V~	16A	2P	55231	
			3P	55232	
		32A	2P	55281	
			3P	55282	
	40 to 50V~	16A	2P	55233	
			3P	55234	
		32A	2P	55283	
			3P	55284	
	20 to 50V=	16A	2P	55235	
		32A	2P	55285	
LV	100 to 130V~	16A	2P+E	57501	56200
			3P+E	57502	56201
			3P+N+E	57503	56202
		32A	2P+E	58201	56220
			3P+E	58202	56221
			3P+N+E	58203	56222
		63A	2P+E		56240
			3P+E		56241
			3P+N+E		56242
	200 to 250V~	16A	2P+E	57504	56203
			3P+E	57505	56204
			3P+N+E	57506	56205
		32A	2P+E	58204	56223
			3P+E	58205	56224
			3P+N+E	58206	56225
		63A	2P+E		58710
			3P+E		58711
			3P+N+E		58712
		125A	3P+E		59130
			3P+N+E		59131
	380 to 415V~	16A	2P+E	57507	56206
			3P+E	57508	56207
			3P+N+E	57509	56208
		32A	2P+E	58207	56226
			3P+E	58208	56227
			3P+N+E	58209	56228
		63A	2P+E		56246
			3P+E		58714
			3P+N+E		58715
		125A	3P+E		59136
			3P+N+E		59137
	480 to 500V~	16A	3P+E	56359	56209
			3P+N+E	56360	56210
		32A	3P+E	56379	56229
			3P+N+E	56380	56230
		63A	3P+E		58717
			3P+N+E		56250

IP44 and 66/67 P17 plugs, mobile sockets, socket outlets and applicance inlets

Cat. No.(s) : 521 00/01/02/03/05 - 539 49 - 552 XX - 553 XX
559 XX - 562 XX - 563 XX - 564 XX - 565 XX - 568 XX
573 XX - 574 XX - 575 XX - 576 XX - 577 21/22
580 XX - 581 XX 582 XX - 587 XX - 591 XX

2. RANGE *(continued)*

Straight plugs 16/32/63/125A IP66/67

				IP44	IP 66/67
ELV	20 to 25V~	16A	2P	55221	
			3P	55222	
		32A	2P	55271	
			3P	55272	
	40 to 50V~	16A	2P	55223	
			3P	55234	
		32A	2P	55273	
			3P	55274	
	20 to 50V=	16A	2P	55225	
		32A	2P	55275	
LV	100 to 130V~	16A	2P+E	57421	56300
			3P+E	57422	56301
			3P+N+E	57423	56302
		32A	2P+E	58121	56320
			3P+E	58122	56321
			3P+N+E	58123	56322
		63A	2P+E		56340
			3P+E		56341
			3P+N+E		56342
	200 to 250V~	16A	2P+E	57424	56303
			3P+T	57425	56304
			3P+N+E	57426	56305
		32A	2P+E	58124	56323
			3P+E	58125	56324
			3P+N+E	58126	56325
		63A	2P+E		58700
			3P+E		58701
			3P+N+E		58702
		125A	3P+E		59120
			3P+N+E		59121
	380 to 415V~	16A	2P+E	57427	56306
			3P+E	57428	56307
			3P+N+E	57429	56308
		32A	2P+E	58127	56326
			3P+E	58128	56327
			3P+N+E	58129	56328
		63A	2P+E		56346
			3P+E		58704
			3P+N+E		58705
		125A	3P+E		59126
			3P+N+E		59127
	480 to 500V~	16A	3P+E	56359	56309
			3P+N+E	56360	56310
		32A	3P+E	56379	56329
			3P+N+E	56380	56330
		63A	3P+E		58707
			3P+N+E		56350

2. RANGE *(continued)*

Angled plugs 16/32A IP44, IP66/67

				IP44	IP 66/67
LV	100 to 130V~	16A	2P+E	56450	56500
			3P+E	56451	56501
			3P+N+E	56452	56502
		32A	2P+E	56470	56520
			3P+E	56471	56521
			3P+N+E	56472	56522
	200 to 250V~	16A	2P+E	56453	56503
			3P+E	56454	56504
			3P+N+E	56455	56505
		32A	2P+E	56473	56523
			3P+E	56474	56524
			3P+N+E	56475	56525
	380 to 415V~	16A	2P+E	56456	56506
			3P+E	56457	56507
			3P+N+E	56458	56508
		32A	2P+E	56476	56526
			3P+E	56477	56527
			3P+N+E	56478	56528
	480 to 500V~	16A	3P+E	56460	56509
			3P+N+E	56461	56510
		32A	3P+E	56480	56529
			3P+N+E	56481	56530

IP44 and 66/67 P17 plugs, mobile sockets, socket outlets and applicance inlets

Cat. No.(s) : 521 00/01/02/03/05 - 539 49 - 552 XX - 553 XX
559 XX - 562 XX - 563 XX - 564 XX - 565 XX - 568 XX
573 XX - 574 XX - 575 XX - 576 XX - 577 21/22
580 XX - 581 XX 582 XX - 587 XX - 591 XX

2. RANGE *(continued)*

Appliance inlets 16/32/63/125A IP44, IP66/67

				IP44	IP 66/67
ELV	20 to 25V⎓	16A	2P	55241	
			3P	55242	
		32A	2P	55291	
			3P	55292	
	40 to 50V⎓	16A	2P	55243	
			3P	55244	
		32A	2P	55293	
			3P	55294	
	20 to 50V=	16A	2P	57560	
		32A	2P	58260	
LV	100 to 130V⎓	16A	2P+E	57581	56800
			3P+E	57582	56801
			3P+N+E	57583	56802
		32A	2P+E	58281	56820
			3P+E	58282	56821
			3P+N+E	58283	56822
		63A	2P+E		56840
			3P+E		56841
			3P+N+E		56842
	200 to 250V⎓	16A	2P+E	57584	56803
			3P+E	57585	56804
			3P+N+E	57586	56805
		32A	2P+E	58284	56823
			3P+E	58285	56824
			3P+N+E	58286	56825
		63A	2P+E		58730
			3P+E		58731
			3P+N+E		58732
		125A	3P+E		59140
			3P+N+E		59141
	380 to 415V⎓	16A	2P+E	57587	56806
			3P+E	57588	56807
			3P+N+E	57589	56808
		32A	2P+E	58287	56826
			3P+E	58288	56827
			3P+N+E	58289	56828
		63A	2P+E		56846
			3P+E		58734
			3P+N+E		58735
		125A	3P+E		59146
			3P+N+E		59147
	480 to 500V⎓	16A	3P+E	57590	56809
			3P+N+E	57591	56810
		32A	3P+E	58290	56829
			3P+N+E	58291	56830
		63A	3P+E		56848
			3P+N+E		56849

Note : Some references of this complete range will be sold until out of stock.

3. DIMENSIONS

Surface mounting sockets 16/32A IP44

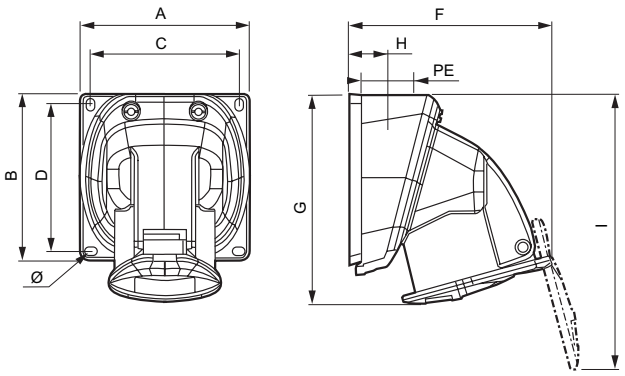

	Weight (kg)	A	B	C	D	F	G	H	I	PE	Ø
TBT	0.167	84	84	73	72	101	103	19	134.5	M 25	4.3
BT 16 A											
2 P+⏚	0.185	84	84	73	72	103	103.5	20	134	M 20	4.3
3 P+⏚	0.244	100	100	88	87	115	120	24	156	M 20	4.3
3 P+N+⏚	0.269	100	100	88	87	118.5	121	24	162	M 20	4.3
BT 32 A											
2 P+⏚ 3 P+⏚	0.356	110	110	98	97	135	162	30	174	M 25	5.3
3P+N+⏚	0.397	110	110	98	97	137	162.5	30	178	M 25	5.3

Surface mounting sockets 16/32A IP66/67

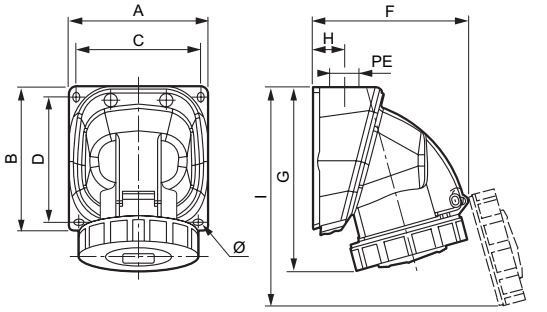

	Weight (kg)	A	B	C	D	F	G	H	I	PE	Ø
BT 16 A											
2 P+⏚	0.230	84	84	73	72	94	112	20	130	M 20	4.3
3 P+⏚	0.289	100	100	88	87	108	128	24	154	M 20	4.3
3 P+N+⏚	0.317	100	100	88	87	110	129	24	157	M 20	4.3
BT 32 A											
2 P+⏚ 3 P+⏚	0.425	110	110	98	97	126	146	30	175	M 25	5,3
3 P+N+⏚	0.467	110	110	98	97	136	170.5	30	205	M 25	5,3

IP44 and 66/67 P17 plugs, mobile sockets, socket outlets and applicance inlets

Cat. No.(s) : 521 00/01/02/03/05 - 539 49 - 552 XX - 553 XX
559 XX - 562 XX - 563 XX - 564 XX - 565 XX - 568 XX
573 XX - 574 XX - 575 XX - 576 XX - 577 21/22
580 XX - 581 XX 582 XX - 587 XX - 591 XX

3. DIMENSIONS *(continued)*

Surface mounting sockets 63A IP66/67

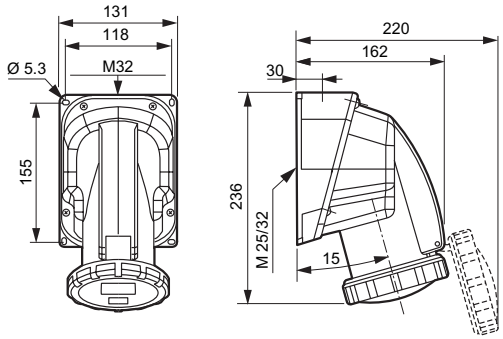

	Weight (kg)
3 P+⏚	0.90
3 P+N+⏚	0.95

Surface mounting sockets 125A IP66/67

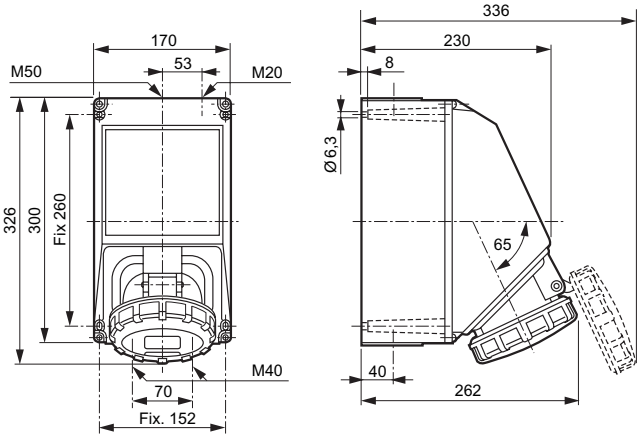

	Weight (kg)
3 P+⏚	2.6
3 P+N+⏚	2.73

3. DIMENSIONS *(continued)*

Panel mounting-sockets (70 x 70) 16/32A IP44

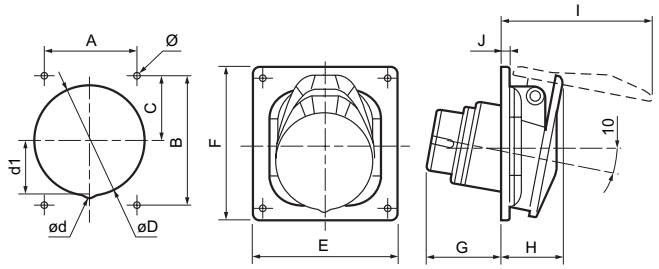

	Weight (Kg)	A	B	C	øD	ød	d1	E	F	G	H	I	J	Ø
TBT	0.100	70	70	35	63	–	–	84	84	33	32.5	83	4.5	4.2
BT 16 A														
2P+⏚	0.110	70	70	35	76.2	–	–	84	84	42	33	83.5	4.5	4.2
3P+⏚	0.140	70	70	35	76.2	–	–	84	84	43	34.5	91.3	4.5	4.2
3P+N+⏚	0.165	70	70	35	76.2	–	–	84	84	43	36.5	100	4.5	4.2
BT 32 A														
2P+⏚	0.220	70	70	35	76.2	–	–	84	94	54	44	112	4.5	4.2
3P+⏚														
3P+N+⏚	0.255	70	70	35	76.2	8	36	84	94	54	45	120	4.5	4.2

Panel-mounting sockets (70 x 70) 16/32A IP66/67

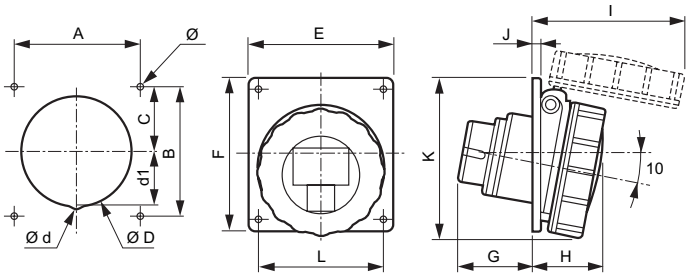

	Weight (Kg)	A	B	C	øD	ø d	d1	E	F	G	H	I	J	K	L	Ø
BT 16 A																
2P+⏚	0.140	70	70	35	76.2	-	-	84	84	42	39	83	4.5	90	72.5	4.2
3P+⏚	0,165	70	70	35	76.2	-	-	84	84	43	41	98	4.5	93	81	4.2
3P+N+⏚	0,195	70	70	35	76.2	-	-	84	84	43	41	99	4.5	91	86.5	4.2
BT 32 A																
2P+⏚	0.240	70	70	35	76.2	-	-	84	94	54	50	113	4.5	101	94.5	4.2
3P+⏚																
3P+N+⏚	0.270	70	70	35	76.2	8	36	84	94	54	51	120	4.5	103	101	4.2

IP44 and 66/67 P17 plugs, mobile sockets, socket outlets and applicance inlets

Cat. No.(s) : 521 00/01/02/03/05 - 539 49 - 552 XX - 553 XX
559 XX - 562 XX - 563 XX - 564 XX - 565 XX - 568 XX
573 XX - 574 XX - 575 XX - 576 XX - 577 21/22
580 XX - 581 XX 582 XX - 587 XX - 591 XX

3. DIMENSIONS *(continued)*

Panel-mounting sockets (inclined outlet) 16A IP44

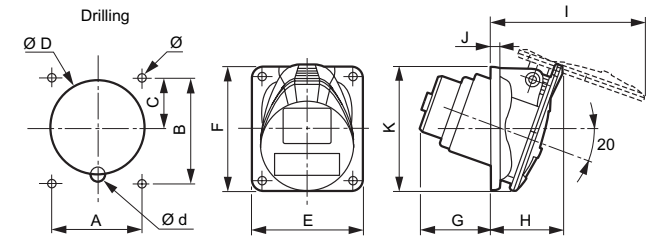

	Weight (kg)	A	B	C	Ø D	Ø d	E	F	G	H	I	J	K	Ø
BT 16 A														
2 P+⏚	0.110	52	60	28	55	14 to 14.5	64	72	41	40.5	86.2	5.5	74	4.2
3 P+⏚	0.140	60	70	31	63.5	14 to 14.5	74	84	44	41	91.6	5.5	84.1	5.2
3 P+N+⏚	0.165	60	70	33	70.6	0	80	84	44	45.4	105	5.5	88.5	5.2

Panel-mounting sockets (inclined outlet) 16A IP66/67

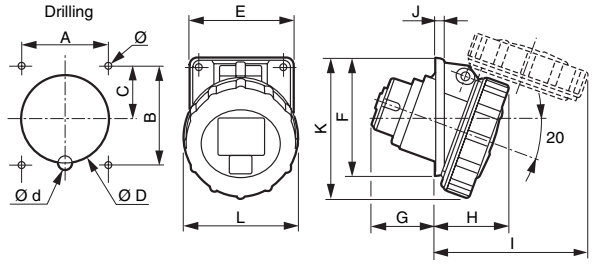

	Weight (kg)	A	B	C	Ø D	Ø d	E	F	G	H	I	J	K	L	Ø
BT 16 A															
2 P+⏚	0.140	52	60	33	55	0	64	72	40	45	92	5.5	87	72.5	4.2
3 P+⏚	0.165	60	70	39	63.5	0	74	84	41	48	106	5.5	96	81	5.2
3 P+N+⏚	0.195	60	70	37	70.6	0	80	84	42	50	110	5.5	96	86.5	5.2

Panel-mounting sockets 16/32A IP44 (straight)

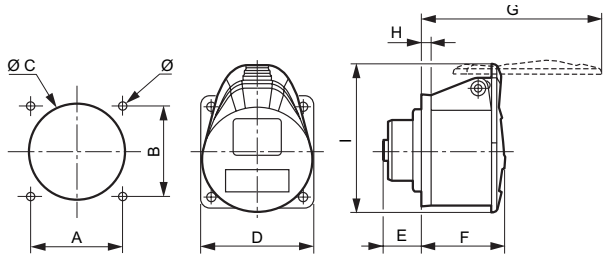

	Weight (kg)	A	B	Ø C	D	E	F	G	H	I	Ø
TBT	0.100	42	42	42	55	23.1	37.2	84.4	4	75.8	4.2
BT 16 A											
2 P+⏚	0.105	47	47	47	58	22.4	50	98.5	5.5	78.5	5.5
3 P+⏚	0.127	52	52	55	65	22.4	50.5	104	5.5	85.6	5.5
3 P+N+⏚	0.148	52	52	55	70	22.4	51	113	5.5	93.5	5.5
BT 32 A											
2 P+⏚	0.197	60	60	57.1	75	31.4	61.3	127	5.5	97.5	5.5
3 P+⏚	0.197	60	60	57.1	75	31.4	61.3	127	5.5	97.5	5.5
3 P+N+⏚	0.246	60	60	63.5	77	31.4	61.7	134	5.5	104.5	5.5

3. DIMENSIONS *(continued)*

Panel-mounting sockets 63A IP66/67

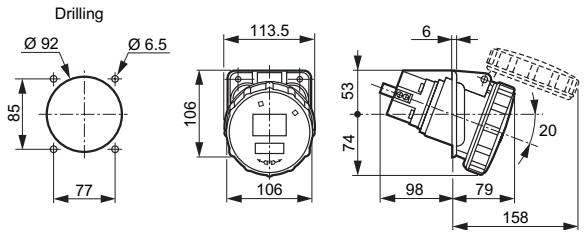

(kg)	Weight
3 P+⏚	0.71
3 P+N+⏚	0.77

Panel-mounting sockets 125A IP66/67

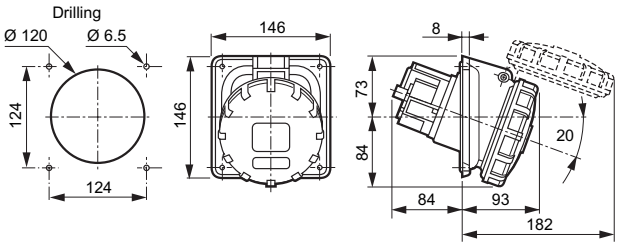

	Weight (kg)
3 P+⏚	1
3 P+N+⏚	1.2

Mobile sockets 16/32A IP44

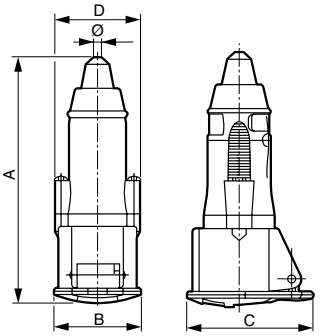

	Weight (kg)	A	B	C	D	Ø
TBT	0.160	154.5	56.3	75.9	-	11.5 to 22
BT 16 A						
2 P+⏚	0.150	155	55	78.5	55	8 to 15.5
3 P+⏚	0.179	162	61.5	85	60	8 to 15.5
3 P+N+⏚	0.212	170	69	93.5	66	8 to 15.5
BT 32 A						
2 P+⏚	0.240	189	69	97.5	70.5	11.5 to 22
3 P+⏚	0.265	191	71	97.5	70.5	11.5 to 22
3 P+N+⏚	0.305	197	77	124	77	11.5 to 22

IP44 and 66/67 P17 plugs, mobile sockets, socket outlets and applicance inlets

Cat. No.(s) : 521 00/01/02/03/05 - 539 49 - 552 XX - 553 XX
559 XX - 562 XX - 563 XX - 564 XX - 565 XX - 568 XX
573 XX - 574 XX - 575 XX - 576 XX - 577 21/22
580 XX - 581 XX 582 XX - 587 XX - 591 XX

3. DIMENSIONS *(continued)*

Mobile sockets 16/32A IP66/67

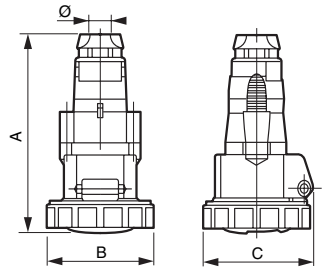

	Weight (kg)	A	B	C	Ø
BT 16 A					
2 P+ ⏚	0.180	139	72.5	78.5	8 to 14
3 P+ ⏚	0.215	144	81	89.5	8 to 14
3 P+N+ ⏚	0.275	160	86.5	92	10 to 17.5
BT 32 A					
2 P+ ⏚	0.320	171	94.5	103	10 to 17.5
3 P+ ⏚	0.320	171	94.5	103	12 to 21.5
3 P+N+ ⏚	0.387	177	101	109	12 to 21.5

Mobile sockets 63/125A IP66/67

63 A 125 A

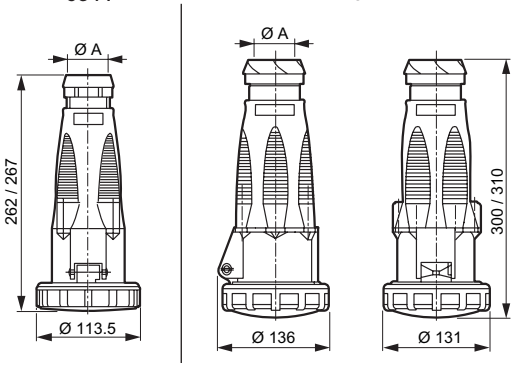

	63 A		125 A	
	Ø	Weight	Ø	Weight
3 P+ ⏚	19.3 to 28.5	0.78	26 to 43	1.4
3 P+N+ ⏚	21.3 to 31.3	0.85	28.5 to 50	1.53

3. DIMENSIONS *(continued)*

Straight plugs 16/32A IP44

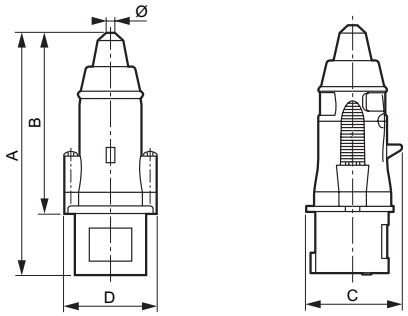

	Weight (kg)	A	B	C	D	Ø
TBT	0.132	151	-	54.7	56.3	11.5 to 22
BT 16 A						
2 P+ ⏚	0.122	147	111	57	55	8 to 15.5
3 P+ ⏚	0.150	154	118	65	60	8 to 15.5
3 P+N+ ⏚	0.177	164	128	73	66	8 to 15.5
BT 32 A						
2 P+ ⏚	0.217	179	134	78	70.5	11.5 to 22
3 P+ ⏚	0.234	179	134	78	70.5	11.5 to 22
3 P+N+ ⏚	0.276	189	144	86	77	11.5 to 22

Straight plugs 16/32A IP66/67

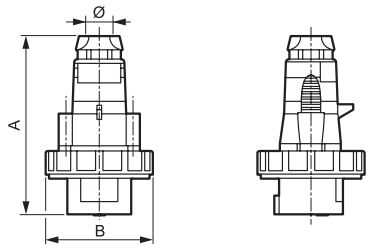

	Weight (kg)	A	B	Ø
BT 16 A				
2P+E	0.165	122	72.5	8 to 14
3P+E	0.175	126	81	8 to 14
3P+N+E	0.218	142	86.5	10 to 17.5
BT 32 A				
2P+E	0.255	152	94.5	10 to 17.5
3P+E	0.276	152	94.5	12 to 21.5
3P+N+E	0.325	158	101	12 to 21.5

IP44 and 66/67 P17 plugs, mobile sockets, socket outlets and applicance inlets

Cat. No.(s) : 521 00/01/02/03/05 - 539 49 - 552 XX - 553 XX
559 XX - 562 XX - 563 XX - 564 XX - 565 XX - 568 XX
573 XX - 574 XX - 575 XX - 576 XX - 577 21/22
580 XX - 581 XX 582 XX - 587 XX - 591 XX

3. DIMENSIONS *(continued)*

Straight plugs 63/125A IP66/67

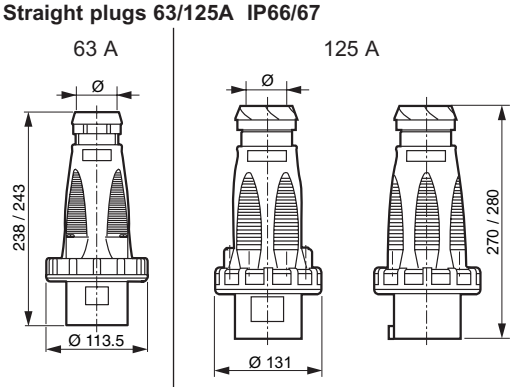

	63 A		125 A	
	Ø	Weight	Ø	Weight
3 P+⏚	19.3 to 28.5	0.57	26 to 43	1.1
3 P+N+⏚	21.3 to 31.3	0.64	28.5 to 50	1.22

Angled plugs 16/32A IP44

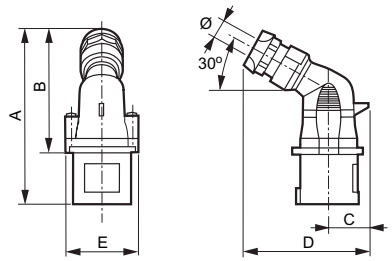

	Weight (kg)	A	B	C	D	E	Ø
BT 16 A							
2 P+⏚	0.120	129	93	29.5	90	55	8 to 14
3 P+⏚	0.145	133	97	33.5	95	60	8 to 14
3 P+N+⏚	0.170	142	106	37.5	104	66	10 to 17.5
BT 32 A							
2 P+⏚	0.225	153	108	39.5	107	70.5	10 to 17.5
3 P+⏚	0.225	153	108	39.5	107	70.5	12 to 21.5
3 P+N+⏚	0.265	159	114	44.5	113	77	12 to 21.5

Angled plugs 16/32A IP66/67

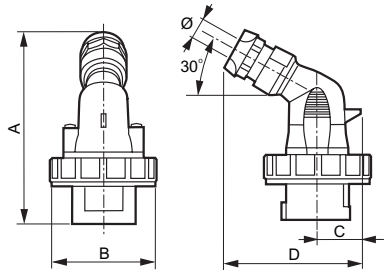

	Weight (kg)	A	B	C	D	Ø
BT 16 A						
2 P+⏚	0.140	130	72.5	29.5	90	8 to 14
3 P+⏚	0.170	133	81	33.5	95	8 to 14
3 P+N+⏚	0.195	142	86.5	37.5	104	10 to 17.5
BT 32 A						
2 P+⏚	0.255	153	94.5	39.5	107	10 to 17.5
3 P+⏚	0.255	153	94.5	39.5	107	12 to 21.5
3 P+N+⏚	0.300	159	101	44.5	113	12 to 21.5

3. DIMENSIONS *(continued)*

Appliance inlets 16/32A IP44

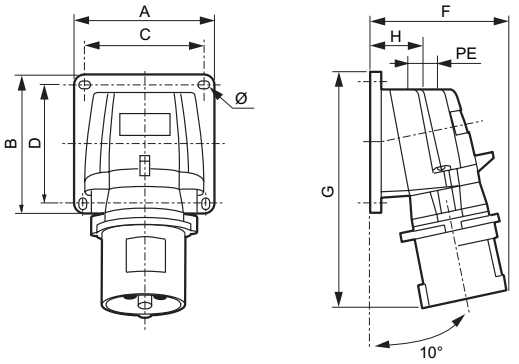

	Weight (kg)	A	B	C	D	F	G	H	PE	Ø
TBT	0.126	84	84	72	72	70	117.5	34	M25	4.3
BT 16 A										
2 P+⏚	0.168	84	84	72	72	77	126	34	M20	4.3
3 P+⏚	0.232	84	84	72	72	84	134	34	M20	4.3
3 P+N+⏚	0.256	84	84	72	72	91	141	34	M20	4.3
BT 32 A										
2 P+⏚ 3 P+⏚	0.325	110	110	98	98	96	168	39	M25	5.3
3 P+N+⏚	0.364	110	110	98	98	102	168	39	M25	5.3

Appliance inlets 16/32A IP66/67

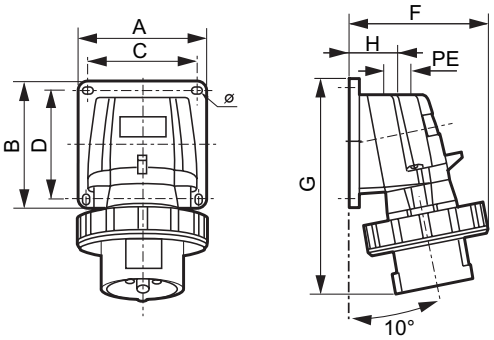

	Weight (kg)	A/B	C/D	F	G	H	PE	Ø
BT 16 A								
2 P+ T	0.188	84	72	87	126	34	M 20	4.3
3 P+T	0.257	84	72	95	134	34	M 20	4.3
3 P+N+T	0.297	84	72	100	141	34	M 20	4.3
BT 32 A								
2 P+T 3 P+T	0.370	110	98	107	168	39	M 25	5.3
3 P+N+T	0.413	110	98	113	168	39	M 25	5.3

IP44 and 66/67 P17 plugs, mobile sockets, socket outlets and applicance inlets

Cat. No.(s) : 521 00/01/02/03/05 - 539 49 - 552 XX - 553 XX
559 XX - 562 XX - 563 XX - 564 XX - 565 XX - 568 XX
573 XX - 574 XX - 575 XX - 576 XX - 577 21/22
580 XX - 581 XX 582 XX - 587 XX - 591 XX

3. DIMENSIONS *(continued)*

Appliance inlets 63A IP66/67

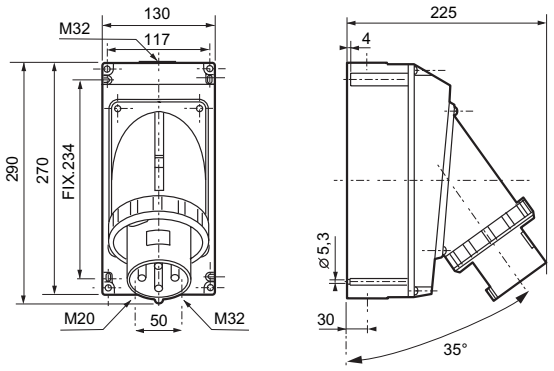

	Weight (kg)
3 P+⏚	1.54
3 P+N+⏚	1.61

Appliance inlets 125A IP66/67

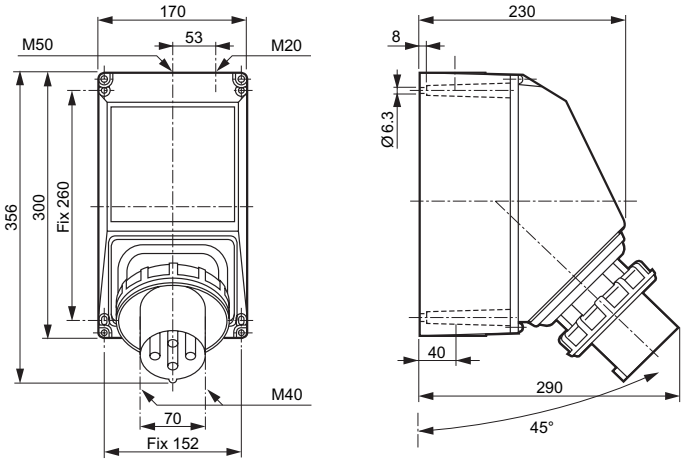

	Weight (kg)
3 P+⏚	2.4
3 P+N+⏚	2.5

4. TECHNICAL CHARACTERISTICS

4.1 Glow wire resistance
- 850°C for the supports of active parts
- 650°C for the rest

4.2 Dielectric strength
3000 V 50 Hz

4.3 Use temperature
min. - 25°C / max. + 40°C

4.4 UV resistance
No change of colour or material following the rest :
Dose rate : 550 W/m²
Test duration : 168 hours
Infrared and ultraviolet filter in order to get as close to the solar spectrum as possible.

4.5 Ageing test
No penetration of dust or water in the IP66/67 products after 7 days of ageing at + 80°C.

4.6 Material characteristics

Aqueous solutions	
Cold water	++
Warm water	-
Vapour	--
Saltwater 5 %	+
Hydrogen peroxide	-
Water + detergent	++
Water + surfactants	+
Formic aldehide	++
Alcohols	
Ethanol	++
Methyl alcohol	-
Propanol	+
Butyl alcohol	+
Glycols	
Ethylene glycol	-
Carbolic acids	--
Cresols	-
Bases	
Ammoniac	+
Sodium hydroxide	--
Sodium hypochlorite (bleach 12°)	-
Potassium hydroxide	+
Oxydizing strong acids	
Concentrated acetic acid	--
Nitric acid 5 %	-
Sulfuric acid 10 %	-
Muriatic acid 30 %	-
Perchloric acid 70 %	-
Hydrofluoric acid 70 %	--
Chromic acid 50 %	--
Phosphoric acid 30 %	-
Weak acids	
Diluted acetic acid < 25 %	-
Citric acid	+
Lactic acid	-
Formic acid	--
Uric acid	++

IP44 and 66/67 P17 plugs, mobile sockets, socket outlets and applicance inlets

Cat. No.(s) : 521 00/01/02/03/05 - 539 49 - 552 XX - 553 XX
559 XX - 562 XX - 563 XX - 564 XX - 565 XX - 568 XX
573 XX - 574 XX - 575 XX - 576 XX - 577 21/22
580 XX - 581 XX 582 XX - 587 XX - 591 XX

4. MATERIAL *(continued)*

4.6 Material characteristics *(continued)*

Oils and lubricants - Animal origin
Lard . . . . . ++
Butter, cream . . . . . ++
Oils and lubricants - Vegetal origin
Linseed oil . . . . . ++
Peanut / Olive . . . . . ++
Castor oil . . . . . ++
Glycerin . . . . . ++
Oils and lubricants - Mineral origin
Paraffin . . . . . +
Engine oil . . . . . +
Silicone oil . . . . . +
Cutting oil . . . . . ++
Hydraulic fluid . . . . . ++
Hydrocarbons
Unlead petrol . . . . . +
Diesel oil . . . . . +
Kerosen . . . . . ++
White spirit . . . . . +
Chlorinated solvents
Trichloroethylene . . . . . -
Trichloroethane . . . . . --
Perchloroethylene . . . . . -
Methyl chloride . . . . . --
Carbon tetrachloride . . . . . -
Chloroform . . . . . -
Aromatic solvents
Benzen . . . . . +
Toluene . . . . . +
Xylene . . . . . +
Alphatic solvents
Hexane . . . . . +
Heptane . . . . . .
Fluoride solvents
Trichlofluoridmethan . . . . . --
Ketones
Acetone . . . . . +
Methyl Etyl Ketone . . . . . +
Ethyl acetate . . . . . +
Turpens
Turpentine . . . . . +

Resistance to chemical agents at ambient temperature according to risks of exposure with spraying.
++ excellent resistance (continue exposure)
+ good resistance (durable exposure)
- limited resistance (possible short exposure)
-- light resistance (exposure to avoid)

5. CONNECTION

5.1 Connection capacity

Type	Current	Conductor's size (mm ≤)	Conductor's type
Surface mounting sockets and Panel mounting sockets	ELV 16/32 A	4 to 10	Rigid
	16 A	1.5 to 4	Rigid
	32 A	2.5 to 10	Rigid
	63 A	6 to 25	Rigid
	125 A	25 to 70	Rigid
Appliance inlets	ELV 16/32 A	4 to 10	Rigid
	16 A	1 to 2.5	Rigid
	32 A	2.5 to 6	Rigid
	63 A	6 to 16	Rigid
	125 A	16 to 50	Rigid
Plugs and Mobile sockets	ELV 16/32 A	4 to 10	Flexible
	16 A	1 to 2.5	Flexible
	32 A	2.5 to 6	Flexible
	63 A	6 to 16	Flexible
	125 A	16 to 50	Flexible

Connection capacity of the pilot wire

	63/125 A	Cable
Panel/surface mounting sockets	2.5 to 10	Rigid
Appliance inlets	2.5 to 6	Rigid
Plugs and moble sockets	2.5 to 6	Flexible

5.2 Tightening torque of the connection screws

- 16/32A ELV : from 1 to 1.2 Nm
- 16A LV : from 0.7 to 1 Nm
- 32A LV : from 0.7 to 1 Nm
- 63A LV : from 2 to 2.2 Nm for Phase Earth
  from 0.7 to 1 Nm for Pilot
- 125A LV : from 3 to 4 Nm for Phase Earth
  from 0.7 to 1 Nm for Pilot

IP44 and 66/67 P17 plugs, mobile sockets, socket outlets and applicance inlets

Cat. No.(s) : 521 00/01/02/03/05 - 539 49 - 552 XX - 553 XX
559 XX - 562 XX - 563 XX - 564 XX - 565 XX - 568 XX
573 XX - 574 XX - 575 XX - 576 XX - 577 21/22
580 XX - 581 XX 582 XX - 587 XX - 591 XX

6. WIRING DIAGRAM (example)

Breaking via guide wire :

The guide wire is a control conductor used with the power conductor. If it is interrupted, it causes the breaking of the power circuit via a contactor. This arrangement provides an electrical solution to the requirement for breaking circuits greater than 32A (decree dated 14/11/88). An additional (shorter) pin is therefore added to the various models of sockets to perform this “guide wire” function.
The “guide wire” solution nonetheless remains restricting in terms of both its implementation (requirement for special cables) and its cost (power contactor).

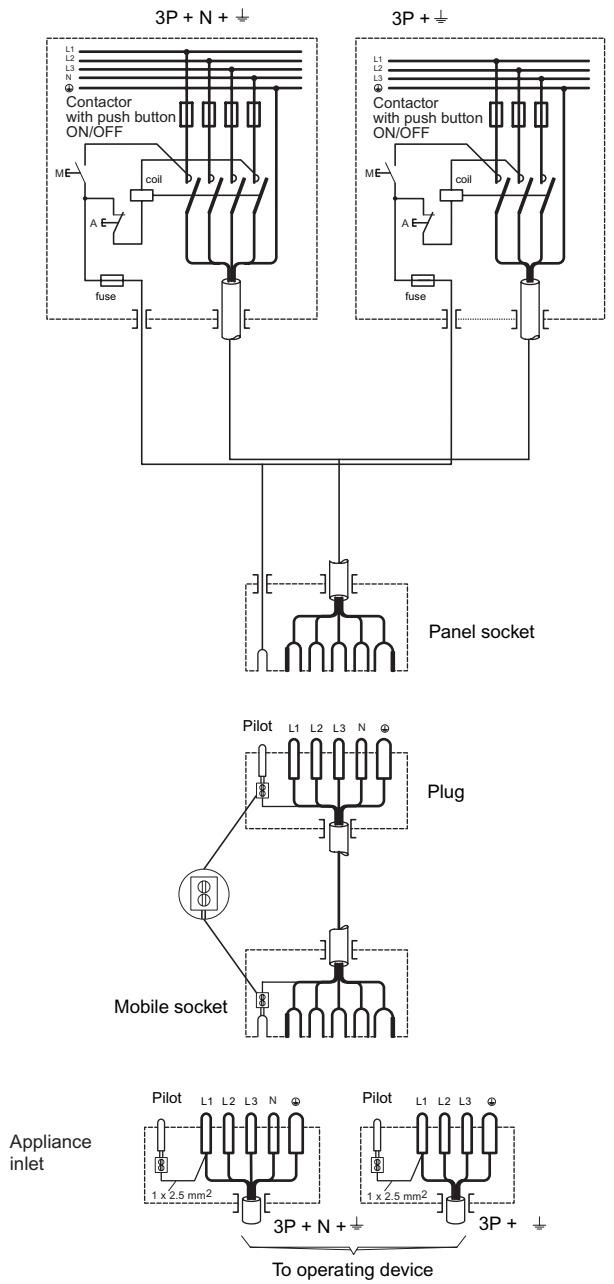

7. STANDARDS AND DECREE

- IEC 60309-1 and NF EN 60309-1 (design rules)
- IEC 60309-2 and NF EN 60309-2 (dimension rules)
- IEC 60529 and NF EN 60529 (IP)
- IEC 62262 and NF EN 62262 (IK)
- Decree of 14/11/88 (workers safety)
- Directive 2002/95/CE (ROHS)

8. ACCESSORIES

P55 adaptor for MOSAIC 2 modules (except special projection).

Cat. No. : 539 48



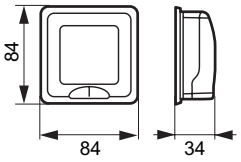

Adaptator IEC / domestique pin configuration (NFC).

Example



Enable to connect a plug 16A 250V NFC with an outlet 16A 2P + T 200/250V IEC

521 00 : NFC
521 01 : British
521 02 : German
521 03 : NFC (with cap)
521 05 : empty for MOSAIC 2 modules.

Flush mounting boxes for masonry IP55
Enable the fitting of panel mounting socket(s) with single fixing centres (70 x 70) and or NFC sockets (576 71, 576 72).

577 21 for 2 x 16A sockets



577 22 for 1 x 16 or 32A sockets



The 32A sockets has to be fixed horizontally (see instruction of installation).