Reliance® VALVES

Automatic Air vent

A high quality air vent that improves the performance of sealed heating systems by automatically bleeding air from the system

Overview

When air becomes trapped in a sealed heating system it can cause a wide variety of problems including excessive noise, corrosion and increased maintenance costs related to air locks that can prevent the system from operating effectively and efficiently. The Automatic Air Vent is installed on the heating system, typically within cylinder cupboards, to automatically bleed air from the heating system.

The device consists of a polypropylene float connected to a simple valve. When the build-up of air within the float chamber exceeds a certain level the float drops, opening the valve and releasing the air trapped within the chamber. As the air is released, water replaces it, and moves the float back into the up position, which closes the valve.

The Automatic Air Vent is available with MBSP or compression connection ends, as well as our latest push-fit variation. Incorporating JG Speedfit, the new range can be fitted and dismounted without tools, making it even easier and faster to install, service or replace valves.

Features & Benefits

- Automatically vents trapped air from within sealed heating systems
- Robust solid brass construction and heat resistant polypropylene float
- Available with a variety of connection ends
- Long-lasting and robust solution
- Prevents excessive system noise and corrosion
- Saves time and cost when commissioning new heating systems
- Reduces call backs to rectify air locks, saving time and money
- 2-year warranty for extra peace of mind

Product code	Description	Size
AVEN100001	Automatic Air Vent	3/8" MBSP
AVEN100003	Automatic Air Vent	15mm compression
AVEN100005	Automatic Air Vent	1/2" MBSP
AVEN300001	Automatic Air Vent	15mm push-fit
AVEN450001	Automatic Air Vent	1/2" MBSP - nickel

AVEN100001



AVEN450001





AVEN300001



AVEN100005

AVEN100003



2 YEAR GUARANTEE

AN RWC BRAND

Automatic Air Vent

Working parameters & specifications (MBSP and compression connection ends)	
Maximum working pressure	10.0 bar
Maximum working temperature	110°C

Working parameters & specifications (Push-fit connection ends)	
Maximum working pressure	6.0 bar
Maximum working temperature	95°C

Applications	
Sealed Heating Systems	√

Materials	
Body	Standard brass
Cap	Standard brass
Float	Heat resistant polypropylene

Installation

The Automatic Air Vent should be installed in a vertical position as its operation is based on the vertical movement of the float.

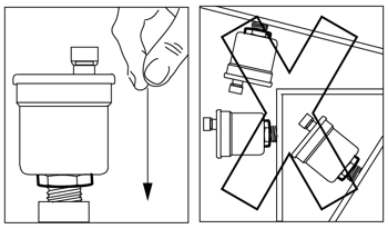

Dimensions – All measurements in mm unless otherwise stated

MBSP

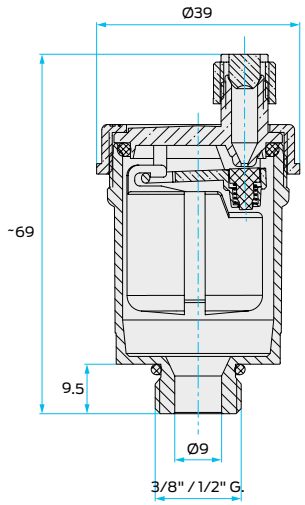

Compression

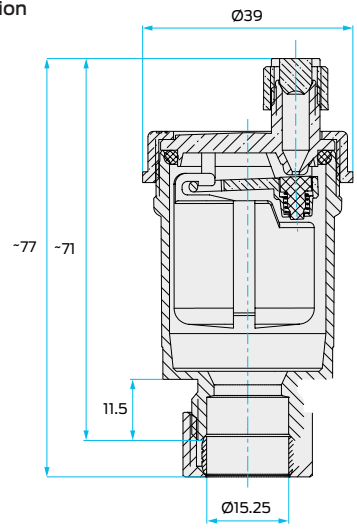

Push-fit

