KSC Series
Sealed Tact Switch for SMT

Features/Benefits

- ***Positive tactile feeling***
- ***J or G terminations***
- ***Various heights***
- ***IP67***

Typical Applications

- ***Automotive***
- ***Cellular phones***
- ***Industrial electronics***
- ***Network infrastructure and IT***
- ***Elevator***

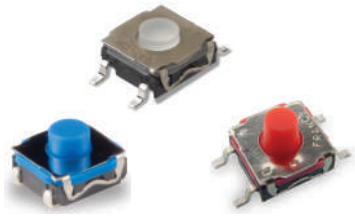

Specification

FUNCTION: Momentary action
CONTACT ARRANGEMENT: 1 make contact = SPST, N.O.
TERMINALS: J bend & Gullwing type for SMT
SEALING: IP67 except KSC5 (IP50)

Liability Limitation

This datasheet does not provide enough information for applications that require a certain level of quality or safety such as automotive, medical systems, or safety equipement. Please contact customer service for the contractual specification package.

Environmental

	Silver	Gold
OPERATING TEMPERATURE:	-40˚C to 85˚C	-40˚C to 125˚C
STORAGE TEMPERATURE:	-55˚C to 85˚C	-55˚C to 125˚C

Process

SOLDERING: Depending on the application, this component is suited to the following methods:
– Terminals being silver or gold plated over a nickel barrier, the use of slightly activated flux is suitable.
– Soldering on double wave machine for vertical versions: soldering time ≤ 5 sec.
– Cleaning according to typical washing processes.
– Infrared Reflow Soldering in accordance with IEC 61760-1.

Electrical

	Silver	Gold
MAXIMUM POWER:	1 VA	0.2 VA
MAXIMUM VOLTAGE:	32 VDC	32 VDC
MINIMUM VOLTAGE:	20 mV	20 mV
MAXIMUM CURRENT:	50 mA	10 mA
MINIMUM CURRENT:	1 mA*	0.1 mA

DIELECTRIC STRENGTH (50 Hz, 1 min.): ≥ 250 Vrms
CONTACT RESISTANCE: ≤ 100mΩ
INSULATION RESISTANCE (100 V): ≥ 10M Ω
BOUNCE TIME: ≤ 1 ms
* Ultra low current with 10 µA - 1 VDC version are available upon request for KSC2 and KSC4

Packaging

Tape and Reel (see series for quantity information)

NOTE: Specifications listed above are for switches with standard options.

KSC Product Range

KSC1	KSC2	KSC3	KSC4	KSC5	KSC6	KSC7	KSC8	KSC9	KSC10
Without actuator	Soft actuator	Hard actuator	Soft actuator	Hard actuator	Hard actuator	Soft actuator	Hard actuator	Hard actuator	Soft actuator
H = 2.5 mm	H = 3.5 mm	H = 3.5 mm	H = 5.2 mm	H = 5.6 mm	H = 7.7 mm	H = 4.3 mm	H = 4.9 mm	H = 7.7 mm compatible with button	H = 4.9 mm
IP67	IP67	IP67	IP67	IP50	IP67	IP67	IP67	IP67	IP67



Note: KSC Series is subject to variants. Please contact customer service for other options.

KSC Series
Sealed Tact Switch for SMT

J J BEND

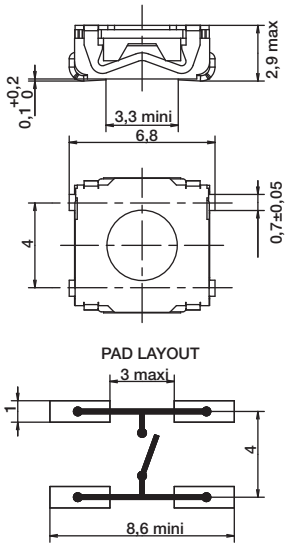

G GULLWING

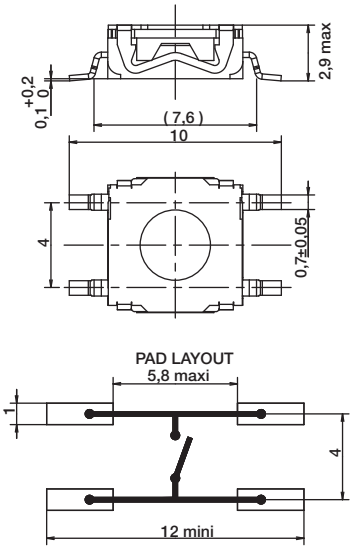

12 MM

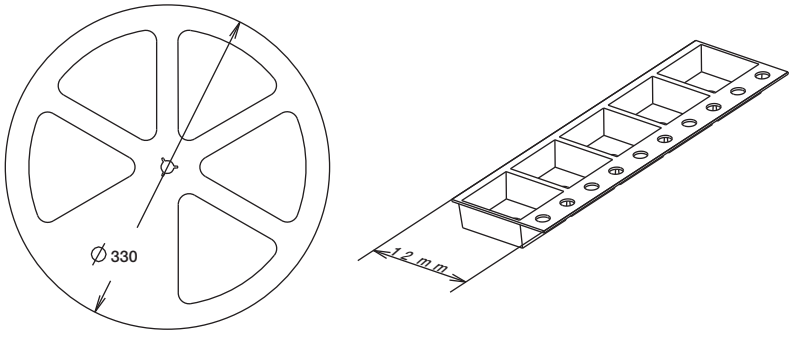

16 MM

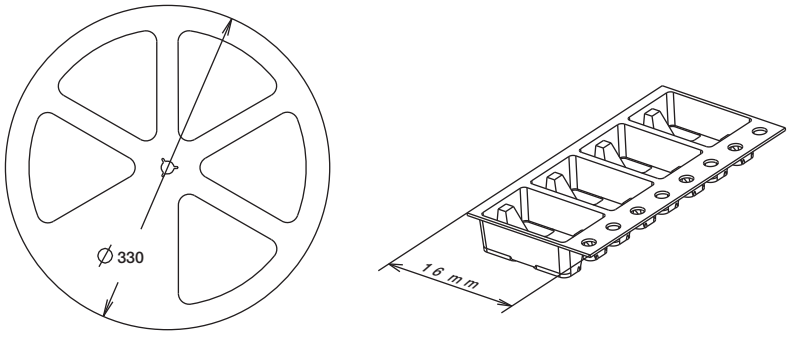

12 mm	Pieces	16 mm	Pieces
KSC1J	2,000	KSC1G	2,000
KSC2J	2,000	KSC2G	2,000
KSC3J	2,000	KSC3G	2,000
		KSC4J & G	1,000
		KSC5J & G	1,000
		KSC6J & G	750
		KSC7J & G	1,000
		KSC8J & G	1,000
		KSC9J & G	750
		KSC10J & G	1,000

First Angle Projection

Dimensions are shown: mm
Specifications and dimensions subject to change

KSC4 Series
Sealed Tact Switch for SMT

KSC4 soft actuator 5,2 mm high



Type	Operating force FA (Newtons)	Operating life (operations)	Travel (mm)
KSC401 50SH	1.45 ± 0.55	5,000,000	0.5 ± 0.25
KSC411 70SH	1.4 ± 0.35	1,000,000	0.35 ± 0.20
KSC421 70SH	1.7 ± 0.45	300,000	0.5 ± 0.25
KSC422 70SH	1.7 ± 0.45	1,000,000	0.5 ± 0.25
KSC441 70SH	4 ± 1	300,000	0.75 ± 0.25
KSC442 70SH	4 ± 1	1,000,000	0.75 ± 0.25
KSC451 70SH	4.25 ± 0.75	300,000	0.8 ± 0.2
KSC441 SPD	3.5 ± 0.9	300,000	0.7 ± 0.2
KSC441 ST1	3.4 ± 1	300,000	0.7 ± 0.25
KSC441 ST2	3.4 ± 1	300,000	0.35 ± 0.20
KSC461 ST1	6.25 ± 1.75	100,000	1 ± 0.3
KSC461 ST2	6.25 ± 1.75	300,000	0.5 ± 0.2

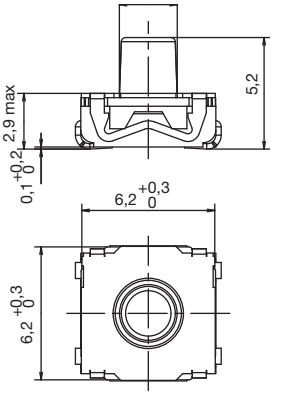

Packaging

Switches delivered on continuous tape & reels of 1,000 pieces
Dimensions according to EIA RS-481/ IEC 60286-3 standard
External diameter 330 ± 2 mm

How To Order

Our easy build-a-switch concept allows you to mix and match options to create the switch you need. To order, select desired option from each category and place it in the appropriate box.

However, please note that all the combinations of these options are not feasible.
For any part number different from those listed above, please consult your local representative.

K S C 4 [ ] [ ] [ ] [ ] [ ] [ ] [ ] [ ]

Operating Force
0 1.45 N (145 grams)
1 1.4N (140 grams)
2 1.7 N (170 grams)
4 4 N (400 grams)
5 4.25 N (425 grams)
6 6.25 N (625 grams)
See mechanical chart above to confirm specifications

Contact Material
1 Silver
2 Silver long life
3 Gold
4 Gold long life

Termination
J J bend
G Gullwing

50SH 50 shore **
70SH 70 shore ***
SPD Special delta version
ST1 High click
ST2 Low click

LFS Lead free compatible, silver plated
LFG Lead free compatible, gold plated

** applies to KSC401J50SH only
*** applies to KSC411J70SH, KSC421J70SH and KSC441J70SH

First Angle Projection

Dimensions are shown: mm
Specifications and dimensions subject to change

KSC4V2 Series
Side Actuated Sealed Tact Switch

Features/Benefits

- *Full SMD side actuated*
- *Haptic adaptability*
- *Pin in paste terminations*
- *Tape & reel*
- *IP67*

Typical Applications

- *Automotive*
- *Industrial electronics*
- *Network equipment*
- *Telecommunications*



Specification

FUNCTION: momentary action
CONTACT ARRANGEMENT: 1 make contact = SPST, N.O.
TERMINALS:
2 pin in paste signal terminals
3 SMD ground terminals

Mechanical

Type	Force (N)	Operating Life (operations)	Travel (mm)
KSC441V2SPDLFS	3.5 ± 1.0	300,000	0.7 ± 0.2
KSC421V270SHLFS	1.55 ± 0.45	300,000	0.5 ± 0.2

NOTE: Basic version is based on KSC441V2 SPDELTA LFS.
Other configurations of haptics are available upon demand.

MISUSE OVERLOAD: 40N with back support
SHEAR FORCE:10N without back support

Electrical

	Silver	Gold
MAXIMUM POWER:	1 VA	0.2 VA
MAXIMUM VOLTAGE:	32 VDC	32 VDC
MINIMUM VOLTAGE:	20 mV	20 mV
MAXIMUM CURRENT:	50 mA	10 mA
MINIMUM CURRENT:	1 mA	0.1 mA

DIELECTRIC STRENGTH (50 Hz, 1 min.): ≥ 250 Vrms
CONTACT RESISTANCE: ≤ 100 mΩ
INSULATION RESISTANCE (100 V, initial stage): > 10^9 Ω
BOUNCE TIME: < 1 ms

Environmental

	Silver	Gold
OPERATING TEMPERATURE:	-40°C to 85°C	-40°C to 125°C
STORAGE TEMPERATURE:	-55°C to 85°C	-55°C to 125°C

Process

SOLDERING: Depending on the application, this component is suited to the following methods:

– Cleaning according to typical washing processes.
– Infrared Reflow Soldering in accordance with IEC 61760-1.

TERMINALS: pin in paste, silver or gold plated
TOP PLATE: tin plated
MSL level: 1
Vacuum pick head mandatory

Packaging

In reels of 500 pieces.
Dimensions of reels according to EIA RS481 or IEC 2863.
External diameter 330 mm ± 2 mm.

NOTE: This product is designed and manufactured for general electronic devices. For systems where reliability and safety are required, please contact your sales representative to secure product integration and function to secure usage.

How To Order

Our easy build-a-switch concept allows you to mix and match options to create the switch you need. To order, select desired option from each category and place it in the appropriate box.
For any part number different from those listed above, please consult your local representative.

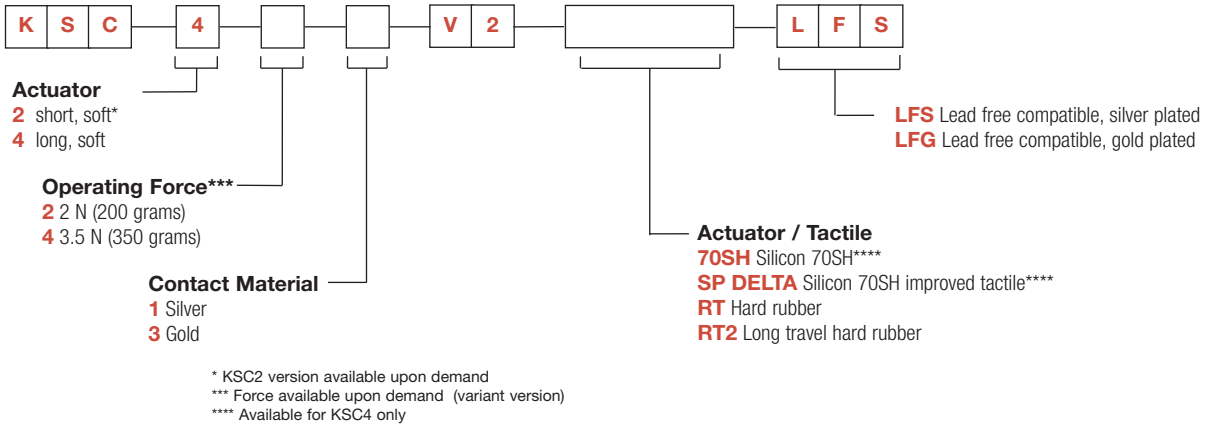

* KSC2 version available upon demand
*** Force available upon demand (variant version)
**** Available for KSC4 only

KSC4V2 Series
Side Actuated Sealed Tact Switch

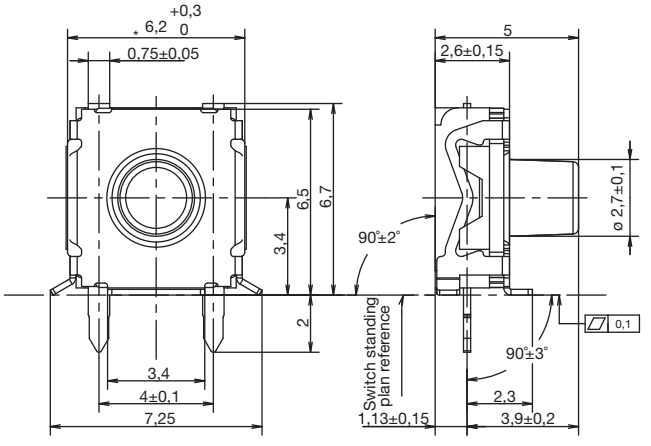

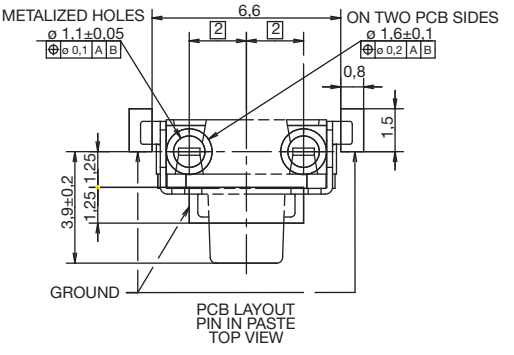

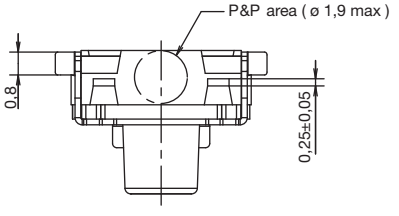

TAPE AND REEL

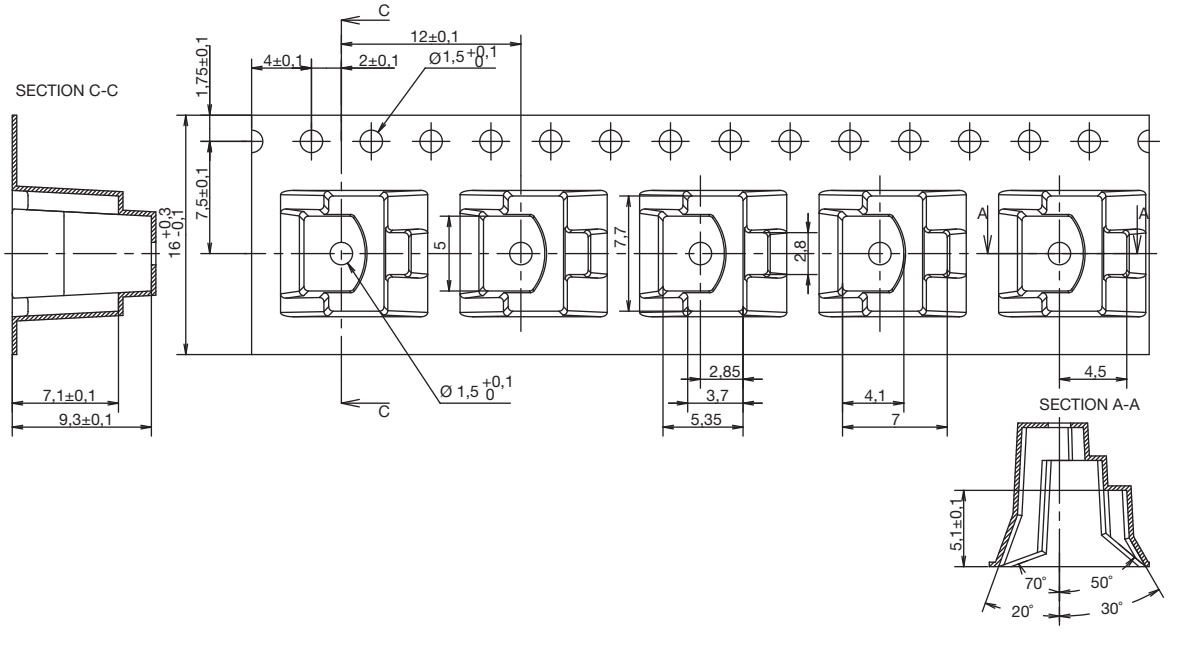

INTEGRATION

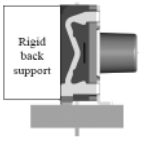

First Angle Projection

Dimensions are shown: mm
Specifications and dimensions subject to change